Refractory designs for corrosion protection and energy savings

Höganäs Borgestad


Höganäs Bjuf AB

The cement specialist

The unique conditions in cement manufacturing have always required specialized refractories, especially now, when more and more alternate fuels are used. That is where Höganäs Borgestad excels. Our refractory solutions improve profitability for cement manu facturers in more than 60 countries on six continents. We deliver refractories that perform better, last longer and give you lower refractory cost per ton of clinker produced, especially when you are using alternative fuels.
Höganäs Borgestad is a multinational organization, and member of Borgestad ASA, which is listed on the Oslo Stock Exchange in Norway. Our activities range from applications-driven R&D through production, distribution, service and support to complete refractory management, including wrecking and installation. Our R&D, production facilities and corporate headquarters are located in Sweden, with sales and support in more than 40 countries around the world.

In today's world, energy and environmental issues are becoming more and more important. In order to better address these problems, Höganäs Borgestad has established cooperation with Skamol A/S.
Skamol A/S was founded in 1912 under the name of Skarrehage Molerværk I/S, with the purpose of utilizing the unique diatomaceous earth deposits known as "Moler", which are found in the Limfjord area in the northwestern part of Denmark. Moler bricks were originally used for house-building and chimney linings.

Starting as a local supplier of insulating bricks, Skamol has grown into a leading supplier of a wide range of insulating materials worldwide.

Today, Skamol develops, manufactures and markets thermal insulating materials for heat-intensive industries. Installing one of our high-temperature insulation products you also benefit the environment. A better insulation value in heat-intensive processes secures a lower heat flow and thus a decrease in energy consumption, which in turn leads to energy savings. Thereby, Skamol helps our customers to lower their carbon footprint by reducing emission, including those of CO_2.

Solving real-life problems

Top priorities for the cement industry today are to reduce fuel consumption and solve the corrosion problems related to increased usage of alternative fuels. Producers focus on cutting down on the number of magnesite bricks in the kiln, and choose other solutions, which can be used in combination with insulating bricks. Using gunning material for insulation also leads to energy losses and reduced energy efficiency.

PREVENTING CORROSION

For many cement groups the average share of alternative fuels has risen up to 50-70%. At around 55%, heavy corrosion is common. But problems start already at 20-25%. That is why we have developed a new design, aimed at reducing the amount of steel parts (anchors) in the lining and thus preventing corrosion.

Problem with anchoring on a cyclone roof.

Casted walls in the riser duct where the anchoring is more or less gone.

Anchoring gone causes lining failure.

Corroded bolts on prefabricated modules.

ALKALI AND CHLORIDE PENETRATION

Chemical attack in the form of alkali penetration is unavoidable in cement production. The worst damage occurs in lower cyclone stages and riser ducts, kiln inlets and even calciner. Alkali and acid vapors infiltrate the refractory linings and attack the binding phase at temperatures as low as 600-700°C, thus endangering the lining. When these gases penetrate behind the refractories, the effects are even worse. CI_2 and SO_2 combine with condensing steam to form acids that corrode anchors.

With higher temperatures, corrosive vapors can penetrate higher into the cyclone system, so alkali- and chloride-resistant refractories should be used. Thus the bricks application solution should be recommended. However, complex geometries will always have to be cast or gunned. All steel anchors will be protected with our brand Corotex (see more in our folder). All load supports and I-beams for roof bricks are painted with acid proof primer to achieve good acid protection.

A WINNING COMBINATION

The new design not only saves energy, but also prevents corrosion and minimizes installation time. By combining the right material and the right installation technique, we are able to offer the best solution for cement producers.

The design is based on hot face bricks for acid atmosphere produced by Höganäs Borgestad and special acid-insulating bricks provided by Skamol.

Optimum design to avoid corrosion of the steel shell:

- Design the refractory layer with the dew point temperature inside the insulating brick
- Alternatively with the dew point temperature outside the steel shell (the acid gas will not condensate inside the construction).

We can then have the dew point inside the bricks (for sulfur 150-170°C) and for salt, chlorine etc. (around 50-70°C) keep it outside the steel.

Acid-resistance testing of Skamol insulating bricks
Testing parameters EN 993-16:1995
70% sulphuric acid is used for this test
Results: Danish diatomaceous earth: 88%

Dew point temperatures of flue gas acids
Sulphuric acid: 150-170°C (depending on the water and sulphur trioxide content in the flue gas)
Nitric acid: 40-65°C
Hydrochloric acid: 50-68°C

For more detailed information about our offer, please contact your local Höganäs Borgestad representative.

Energy-saving refractories for protection against corrosion

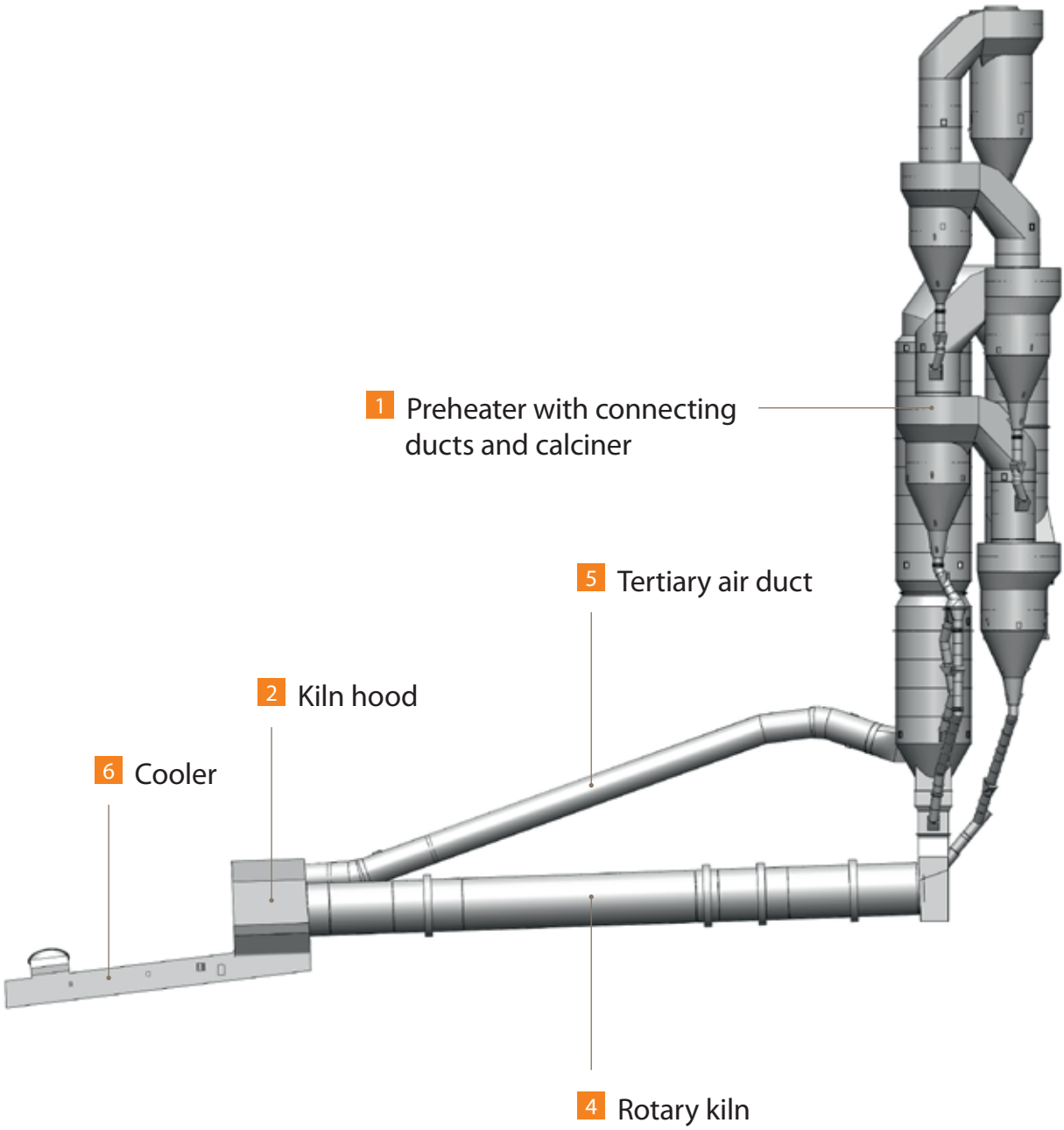

Contents

Preheater with connecting ducts

Cyclone stage 1
Refractory lining thickness: 114 mm
Insulating thickness: 38 mm
Process temp: ≈ 306°C
External shell temp: ≈ 70°C

Cyclone stage 2
Refractory lining thickness: 114 mm
Insulating thickness: 50 mm
Process temp: ≈ 503°C
External shell temp: ≈ 83°C

Cyclone stage 3
Refractory lining thickness: 114 mm
Insulating thickness: 64 mm
Process temp: ≈ 665°C
External shell temp: ≈ 93°C

Cyclone stage 4
Refractory lining thickness: 114 mm
Insulating thickness: 76 mm
Process temp: ≈ 806°C
External shell temp: ≈ 101°C

Cyclone stage 5
Refractory lining thickness: 114 mm
Insulating thickness: 76 mm
Process temp: ≈ 890°C
External shell temp: ≈ 109°C

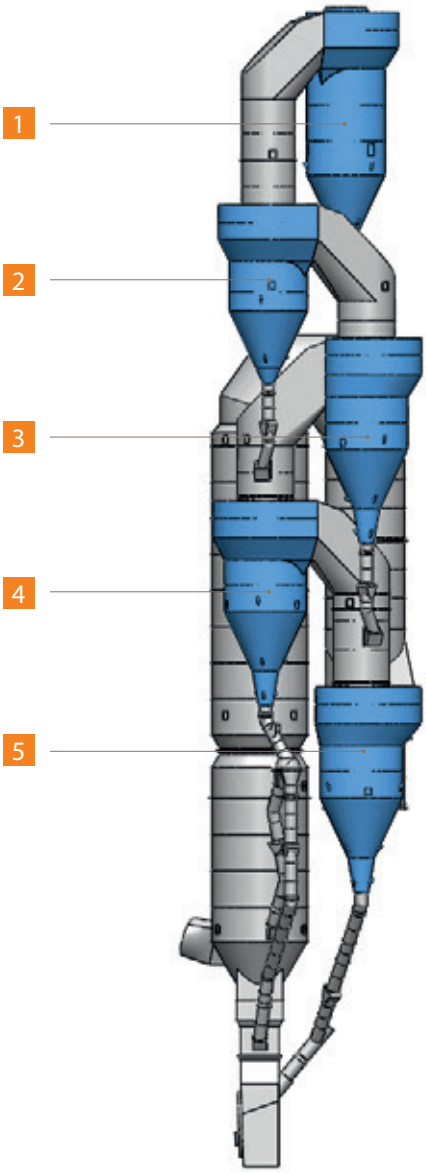

Below you will find Höganäs Borgestad's expert recommendation for lining your cyclone system, both for corrosion protection and quick, safe installation with long lifetime, which provides good runnability.

1. Pre-shaped or pre-casted bricks
2. Cone bricks
3. Cyclone bricks
4. Standard bricks
5. Load support bricks
6. Roof bricks

Quality used:
Chamotte brick Viking 330/Alsic 500
Insulating: Moler brick Hipor 450
Chamotte brick Bjuf SX for
pre-shaped bricks
Low cement castable HÖGANÄS CAST LC 50AR or HÖGANÄS CAST LC S30 for pre-casted brick and castable

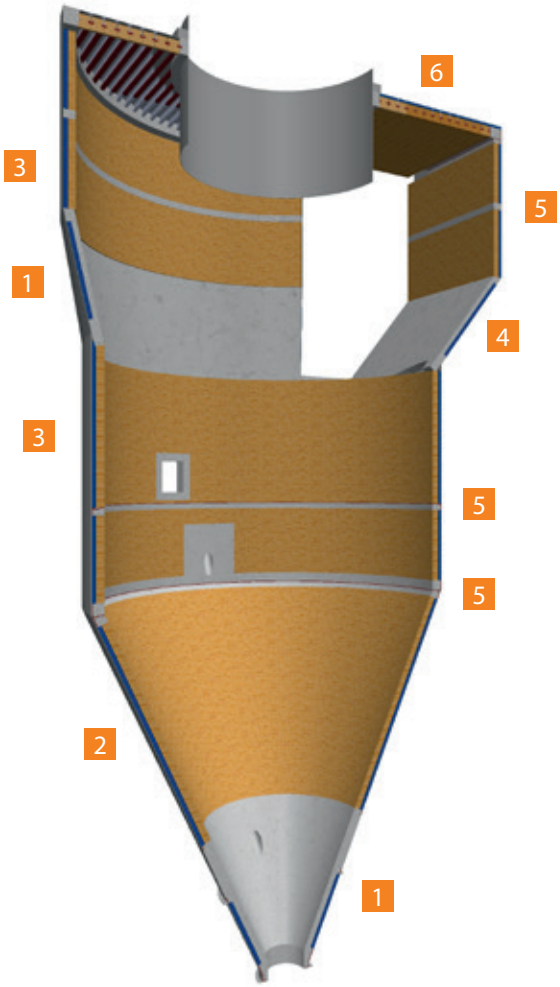

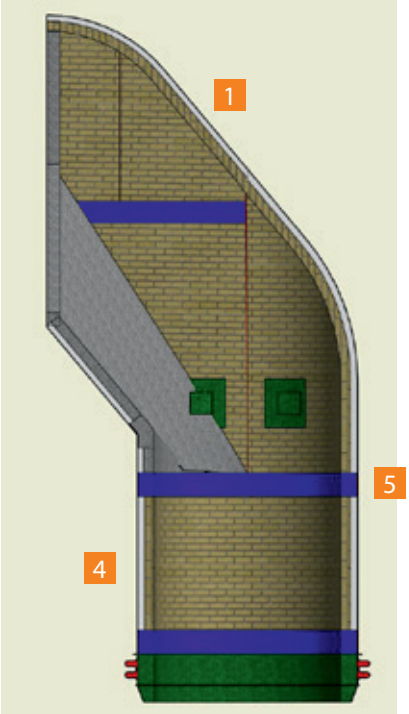

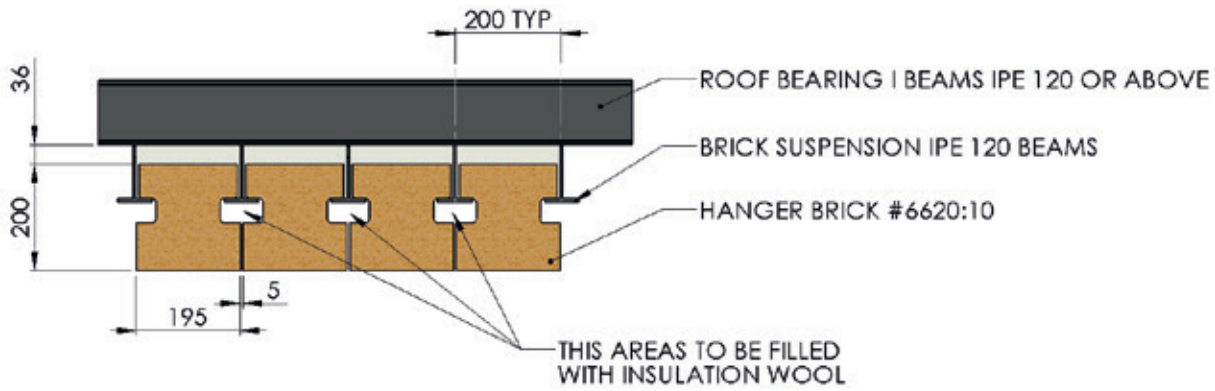

ROOF FOR CYCLONE

For stage 1,4 and 5 we have chosen to have the dew point outside so no insulating will be used. For stage 2 and 3 we will use calcium silicate plate Super 1100E as insulating thickness of the slab will be 25 mm.

The quality of the bricks used will be Viking 330/Alsic 500.

All suspension beams will be painted with acid proof primer.

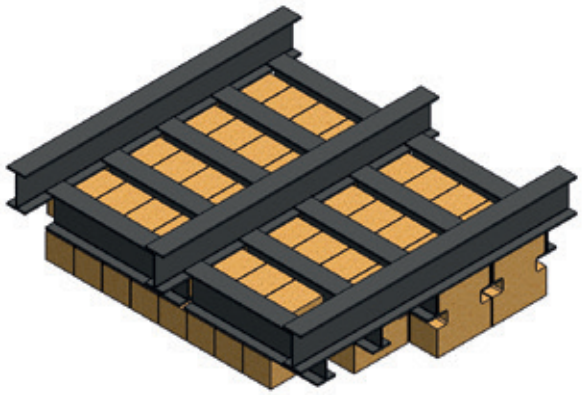

Calciner

Calciner – Upper section
Refractory lining thickness: 114 mm-300 mm
Insulating thickness: 40-150 mm
Process temp: ≈ 900°C
External shell temp: ≈ 109°C

Calciner – Lower section
Refractory lining thickness: 114 mm-300 mm
Insulating thickness: 40-150 mm
Process temp: ≈ 900°C
External shell temp: ≈ 109°C

Calciner – Cones
Refractory lining thickness: 114 mm-300 mm
Insulating thickness: 40-150 mm
Process temp: ≈ 1100°C
External shell temp: ≈ 112°C

Below is Höganäs Borgestad's expert recommendation for lining your calciner.

1. Pre-shaped or pre-casted bricks
2. Cone bricks
3. Cyclone bricks
4. Load support bricks

Quality used:
Chamotte bricks Viking 330
Insulating: Moler brick Hipor 450 and vermeculit board VIP12
Chamotte brick Bjuf SX for pre-shaped bricks
Low cement castable HÖGANÄS CAST LC 50AR or HÖGANÄS CAST LC S30 for pre-casted brick and castable

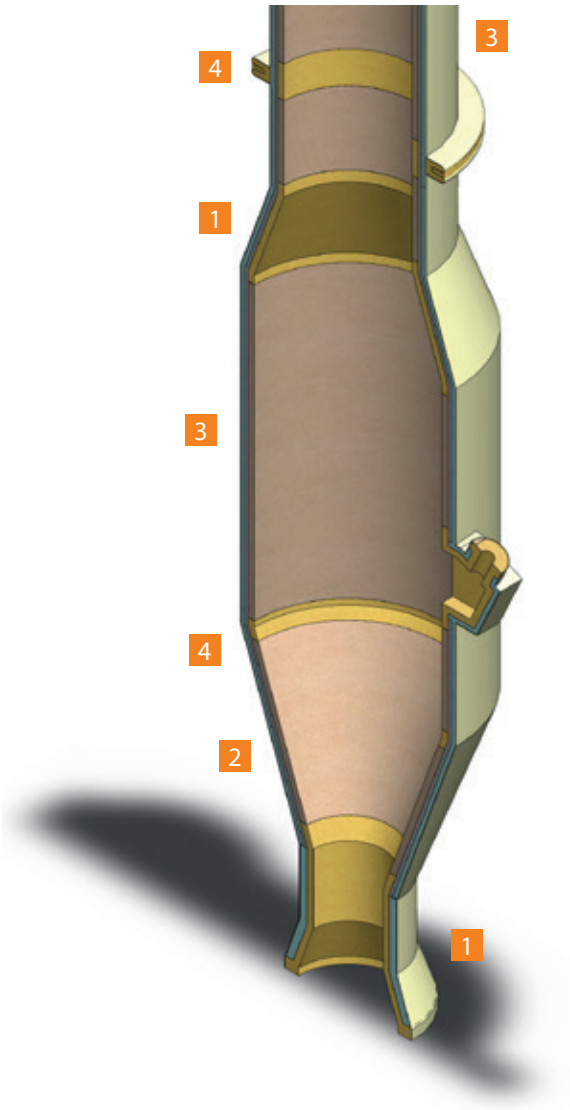

Riser duct

Refractory lining thickness: 230-300 mm
Insulating thickness: 64-150 mm
Process temp: ≈ 1000-1100°C
External shell temp: ≈ 90°C

The riser ducts recycle heated air from lower cyclone stages and the kiln itself, thus improving thermal efficiency and reducing fuel costs.

In the lower, hotter part of the preheater system, chemical influences are the cause and can affect both straight and curved duct sections. Riser duct connected to calciners often suffers from build-up problems. In riser ducts connected to cyclones, build-ups are usually caused by a venture effect. This occurs mostly in the curved sections of the duct.

Quality used:
Chamotte bricks Viking 330/Alsic 500
Insulating 1: Lightweight brick Porosil 23
Insulating 2: Moler brick Hipor 450
Chamotte brick Bjuf SX for pre-shaped bricks
Low cement castable HÖGANÄS CAST LC 50AR or HÖGANÄS CAST LC S30 for pre-casted brick and castable

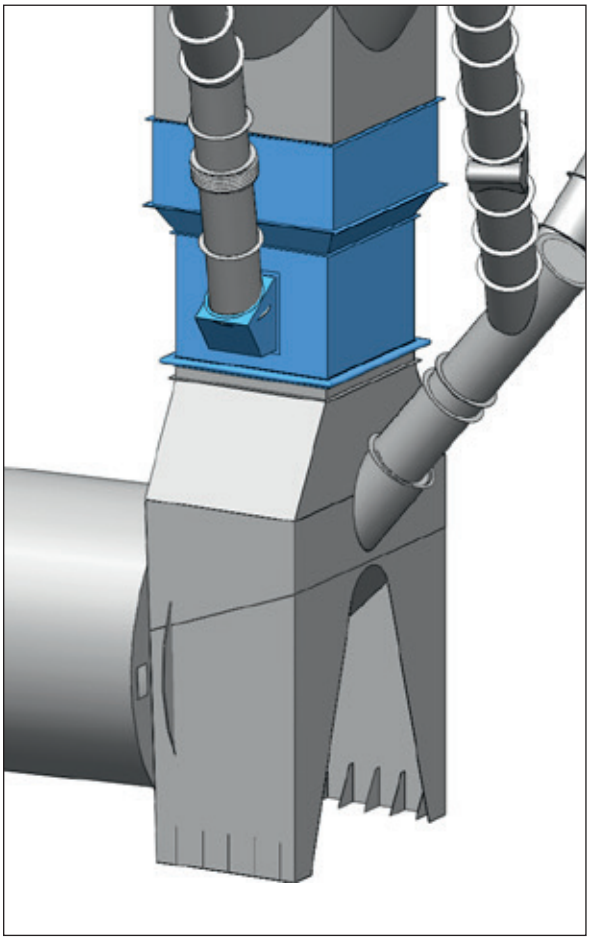

Smoke chamber

Refractory lining thickness: 230-300 mm
Insulating thickness: 64-150 mm
Process temp: ≈ 1100°C
External shell temp: ≈ 98°C

The smoke chamber is subject to the worst exposure that cement manufacturing can cause such as alkali attacks, build-ups, anchor corrosion and high temperatures (≈1300°C).

Quality used:
Chamotte bricks Viking 330/Alsic 500
Insulating 1: Lightweight brick Porosil 23
Insulating 2: Moler brick Hipor 450
Chamotte brick Bjuf SX for pre-shaped bricks
Low cement castable HÖGANÄS CAST LC 50AR or HÖGANÄS CAST LC S30 for pre-casted brick and castable

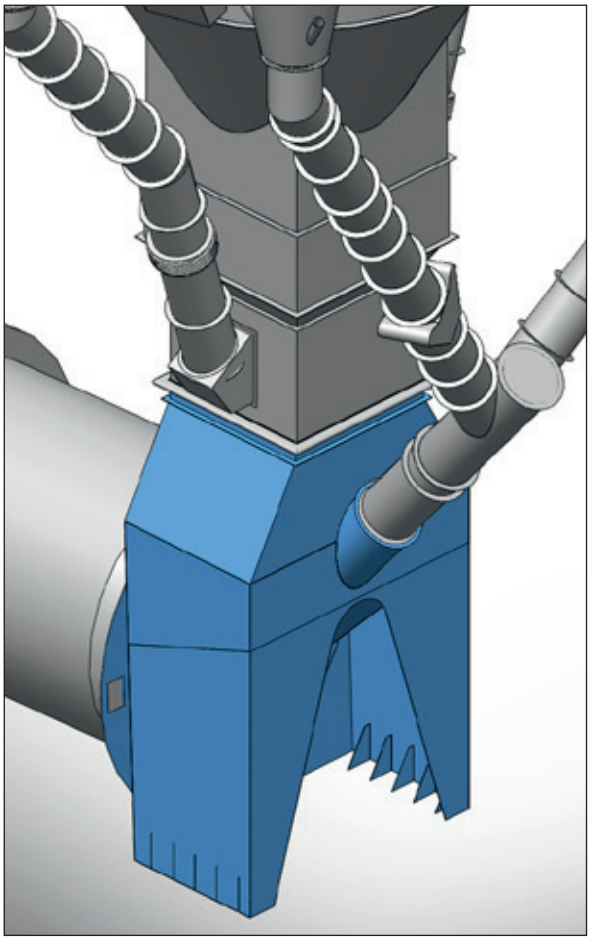

Kiln hood

Refractory lining thickness: 200-300 mm
Insulating thickness: 64-150 mm
Process temp: ≈ 1100°C
External shell temp: ≈ 98°C

1. Rotary kiln bricks
2. Standard shaped bricks
3. Pre-shaped or pre-casted bricks

Quality used:
High-alumina bricks Silox 60
Insulating 1: Lightweight brick Porosil 23
Insulating 2: Moler brick M-Extra E
Low cement castable HÖGANÄS CAST LC 50AR or HÖGANÄS CAST LC S30 for pre-casted brick and castable

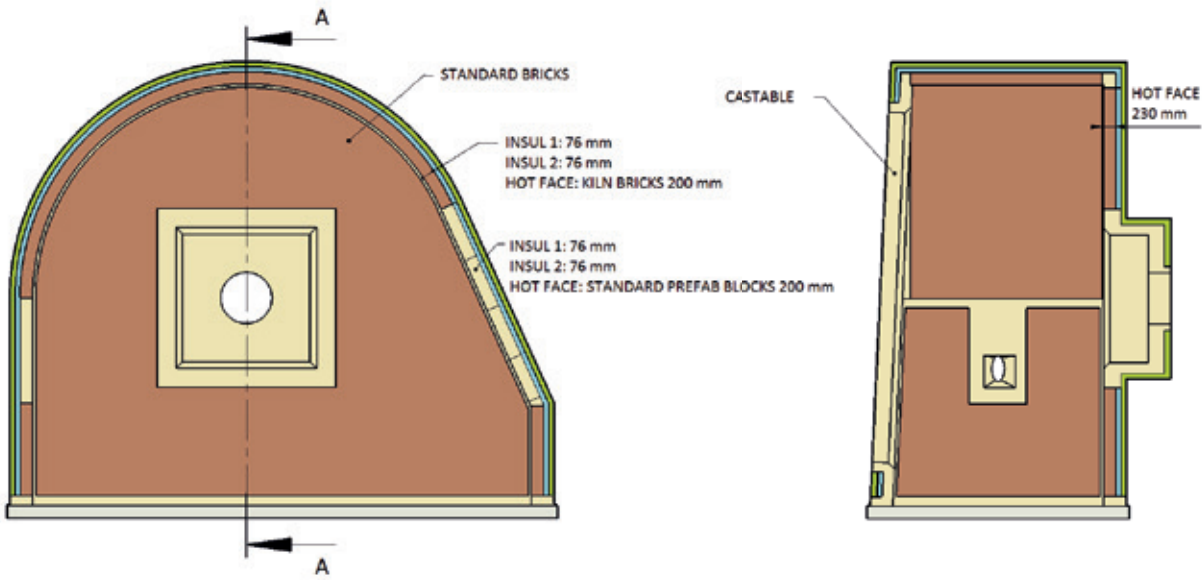

Anchoring system

Höganäs Borgestad anchoring bricks are suitable for use wherever metal anchoring systems cannot be used due to high temperature loading or strong chemical attack from the combustion atmosphere. All holders need to be painted with CoroTex or acid proof primer. Application of other types of alloys is also possible to further reduce corrosion.

Build-ups reduce efficiency and their removal ultimately requires a production stop. Regardless of the method used, removal is a dangerous work. The best option, however, is a refractory that eliminates or minimizes build-ups, such as Alsic 500 bricks and HÖGANÄS CAST LC S30, which can be used in all areas mentioned above.

It is commonly believed that casting, gunning and shot-gunning are faster and therefore less expensive than installing bricks. The truth is quite the opposite. Compared to castables and gunnables, bricks are simple to install and ready to use immediately. It is a finished product: pressed, fired and quality-controlled before delivery. It offers a more cost-effective solution than a monolithic with the same properties and at the same time reduces the amount of steel anchors used.

We therefore suggest that you use bricks or pre-cast blocks wherever possible.

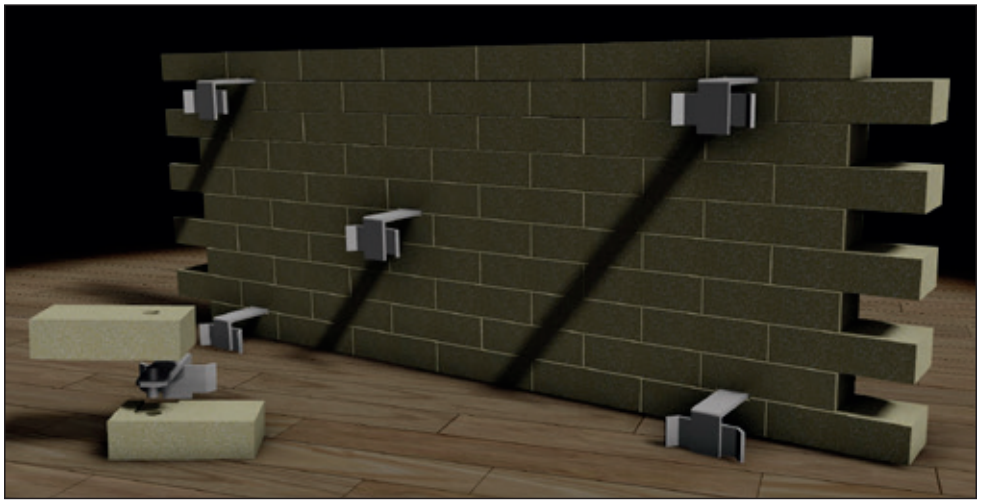

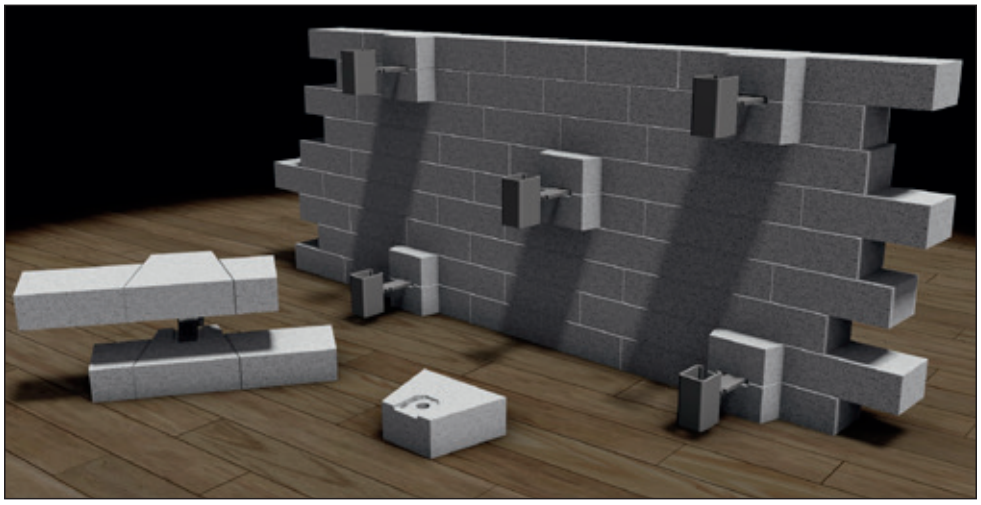

Rotary kiln

At Höganäs Borgestad we want to create high-quality refractory solutions to minimize the impact on the environment.
Today, saving energy is a key issue for the cement industry. We know that many kilns don't have any insulation. Anticipating the increase in prices for mazut and natural gas, Höganäs Borgestad has developed an energy-saving design for thermal insulation in all zones of the kiln. Most of the savings are to be made in the safety/inlet zone, and smaller, but still essential savings in the upper and lower transition zone.

Combined with the installation technology for double lining applied by Höganäs Borgestad our design allows the bricklaying to serve for many years.

Many producers use the kiln to burn waste materials. Widespread use of alternative fuels causes problems for the refractories installed. Higher temperature areas, usually lined with basic bricks (magnesite bricks) require higher refractoriness, alkali and thermal shock resistance, and better resistance to clinker liquid phase corrosion.

The use of high-sulphur fuels, combined with poor combustion engineering, can lead to a higher sulphate compound volatilization and ring formations and build-ups. A number of factors can cause coating to disappear completely, with a resulting tendency for the brick to become weak and friable due to thermo-mechanical fatigue.

Operation with an unstable coating is caused by a variety of factors. Bricks become exposed to infiltration by clinker liquid phase.

Direct action of alkali chlorides and sulphates is a result of using several waste fuels. Brick may subsequently cap. Also, sulphate and chloride diffusion through the refractory can cause kiln shell corrosion.

With the right type of design and installation technique you will save a lot of energy and at the same time minimize damage such as corrosion, ovality, cracks etc., to the steel shell. You can also avoid the catastrophic twisting of the lining, which means increased safety and longer lifetime.

Note that each kiln is unique and these are only guiding principles.

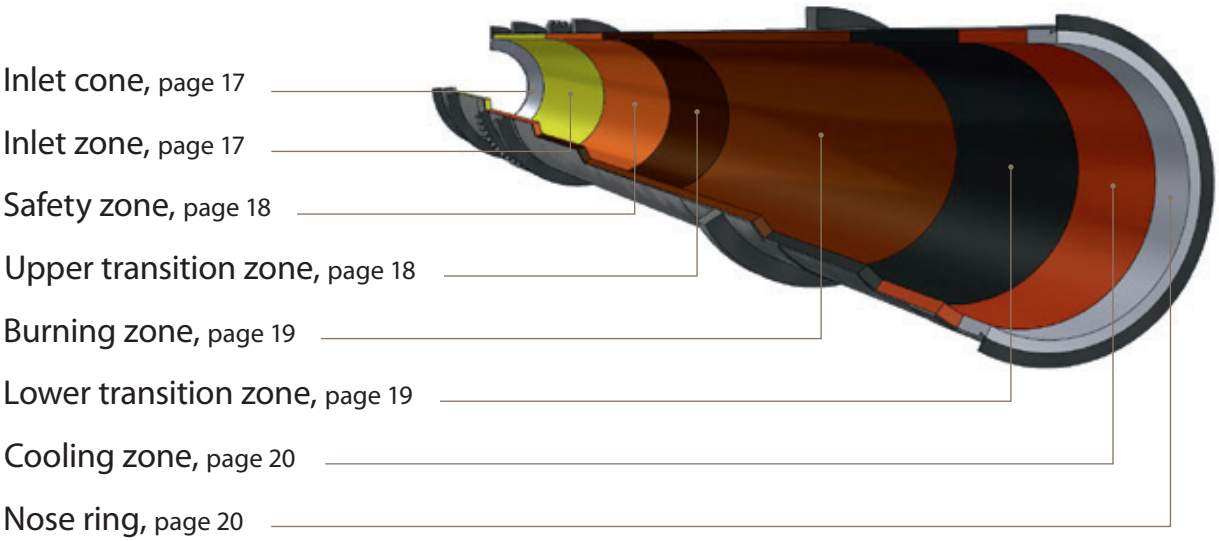

Inlet cone

To avoid anchor corrosion, we use hand-made chamotte bricks or pre-casted bricks.

Depending on the thickness, there are two different types of designs for the bricks as shown in the pictures.

Steel shell is painted with CoroTex or acid proof primer.

Quality used:
Chamotte brick Viking 330/Bjuf SX

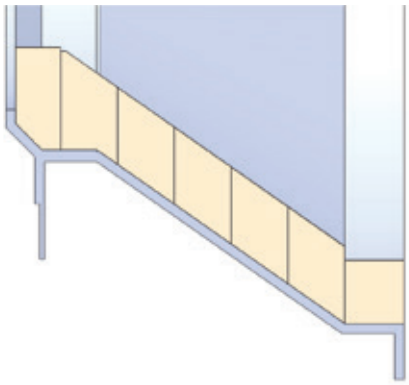

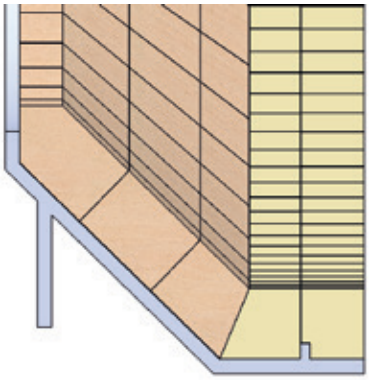

Inlet zone

The primary criterion here is alkali resistance.
Refractory lining thickness: 180-220 mm
Insulating thickness: 64 mm

Quality used:
Chamotte bricks Viking 330/Viking 450
Chamotte brick Bjuf SX is suitable for wet kilns
Insulating: Moler brick M-Extra E
Mortar: Victor H-15 for both hot face and insulating bricks
Shell protection: CoroTexPro

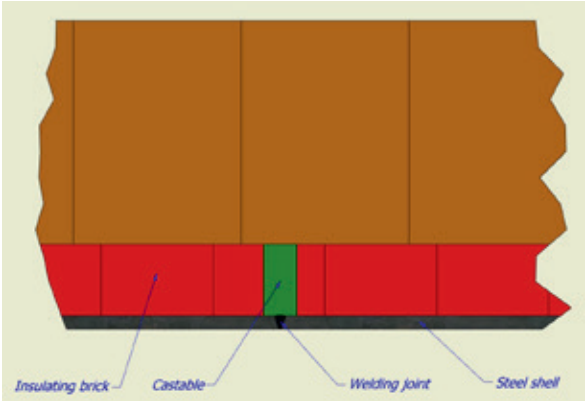

Safety zone

The primary criterion here is alkali and abrasion resistance.
Refractory lining thickness: 180-220 mm
Insulating thickness: 64/38 mm

Quality used:
In this zone, different qualities can be used depending on the process.
Chamotte bricks Viking 330/Viking 450
Dry-pressed bauxite-boosted brick based on chamotte: Alex
Fireclay brick boosted with silicon carbide: Alsic 500 High-alumina brick based on synthetic chamotte: Silox 60

Insulating: Moler brick M-Extra E/chamotte brick Bjuf SX

Mortar: Victor H-15 for chamotte bricks and insulating bricks
Mortar: Höganäs T cement for high-alumina bricks

Shell protection: CoroTexPro

Upper transition zone

This is the zone where liquid phase begins to appear in the raw meal. Here, unstable coating can cause problems with the steel shell due to high temperature. Reducing the temperature on the steel shell is one of the most important factors.

Refractory lining thickness: 200-250 mm
Insulating thickness: 64-33 mm

Quality used:
Magnesite bricks Magnus-Range 87AF-90AF
Insulating: Chamotte brick Bjuf SX
Mortar magnesite: Magnus Bond
Mortar insulating: Höganäs H-15
Shell protection: CoroTexPro

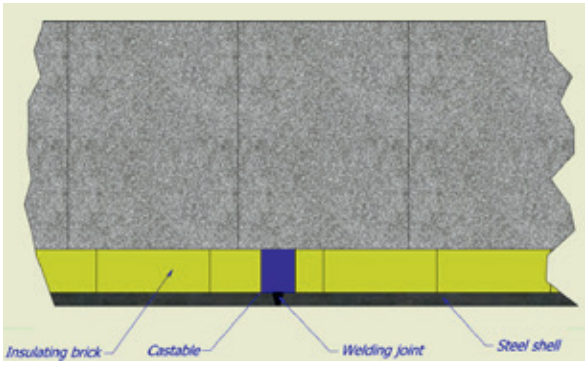

Burning zone

Two factors are paramount to optimal functioning of this zone. First – achieving a proper flame pattern, heat and combustion. Second – generation of clinker coating.

Refractory lining thickness: 200-250 mm
Insulating thickness: 64-33 mm

Quality used:
Magnesite bricks Magnus-Range 87AF-90AF
Insulating: Chamotte brick Bjuf SX
Mortar magnesite: Magnus Bond
Mortar insulating: Höganäs H-15
Shell protection: CoroTexPro

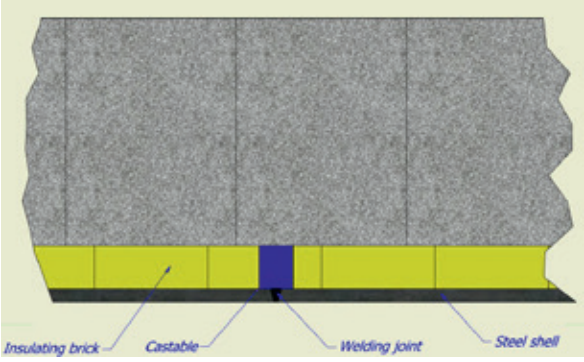

Lower transition zone

Though less complex, the variables that affect this zone are still extensive. High abrasion, capping of the bricks, thermal overload and excessive ovality. It is important to reduce the temperature on the steel shell to be able to get a more stable lining.

Refractory lining thickness: 200-250 mm
Insulating thickness: 64-33 mm

Quality used:
Magnesite bricks Magnus-Range 87AF-90AF
Insulating: Chamotte brick Bjuf SX
Mortar magnesite: Magnus Bond
Mortar insulating: Höganäs H-15
Shell protection: CoroTexPro

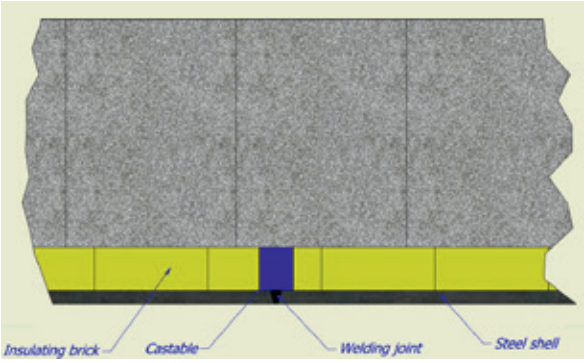

Cooling zone

High abrasion on bricks and steel segments.

Refractory lining thickness: 200-250 mm
Insulating thickness: 64-33 mm

Quality used:
In this zone, different qualities can be used depending on the process.
Chemically bonded fired high-alumina brick based on bauxite: Victor 60/70/80RK
Fireclay brick boosted with silicon carbide: Alsic 500
High-alumina brick based on synthetic chamotte: Silox 60

Insulating: Moler brick M-Extra E/chamotte brick Bjuf SX
Mortar: Victor H-15 for insulating bricks
Mortar: Höganäs T cement for high-alumina bricks
Shell protection: CoroTexPro

Upon request, we will make energy-saving calculation when using magnesite bricks with chamotte bricks as insulation and applying Moler insulating bricks in the other zones.

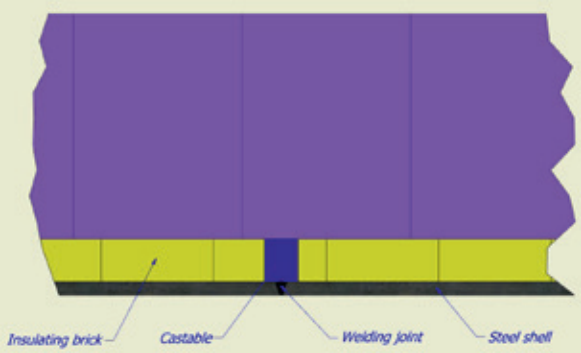

Nose ring

The discharge zone is often severely stressed. Abrasive clinker outfall can cause wear on both refractory linings and steel segments, and thermal shock and axial expansion often accelerate refractory wear. Original brick linings should be of exible, highly abrasion-resistant brick. When steel nose ring segments become worn out, producers have two alternatives: to replace them and reline with brick, or keep them and switch to a castable lining. Höganäs Borgestad can supply cost effective refractory solutions for both alternatives.

Tertiary air duct (TAD)

To make cement production economical and environmentally friendly it is important to recycle the heat using TAD. Air from the grate cooler is filled with highly abrasive clinker dust as well as residual alkali vapors. Travelling through the tertiary air duct at a velocity of 25-30 m/s and an initial temperature of about 1050°C, it wears down the lining, particularly at the bends and dampers. Abrasion resistance and alkali resistance are both important in tertiary air duct refractories. High content of alkaline and sulphur can occur in the inlet area..

Refractory lining thickness: <180 mm
Insulating thickness: 64-100 mm
Process temp: ≈ 1000-1100°C

Quality used:
In TAD different qualities could be used depending on the process.
Chamotte bricks Viking 330
High-alumina brick based on synthetic chamotte: Silox 60

Insulating: Moler brick M-Extra E/Calcium silicate slabs Super 1100E
Mortar: Victor H-15 for insulating bricks
Mortar: Höganäs T cement for high-alumina bricks
Shell protection: Coro Tex pro or acid proof primer

Quality used:
In TAD problems usually occur around the retainer rings. To achieve longer lifetime, we have developed a new design and technology for installation.
As time is important, we nowadays use the same shapes as in rotary kiln. This allows using 25-30% less bricks, makes installation and bricks logistics 30% faster and the lining much more stable.

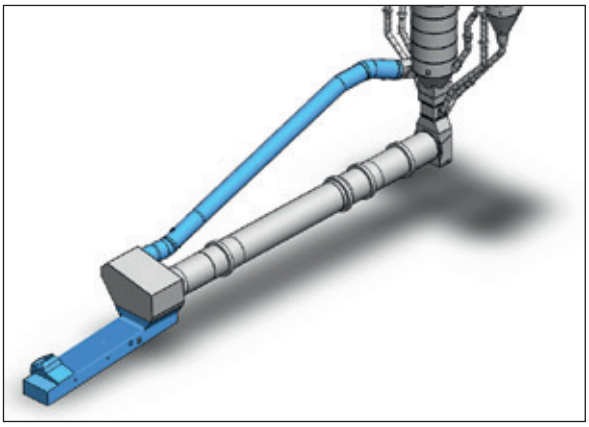

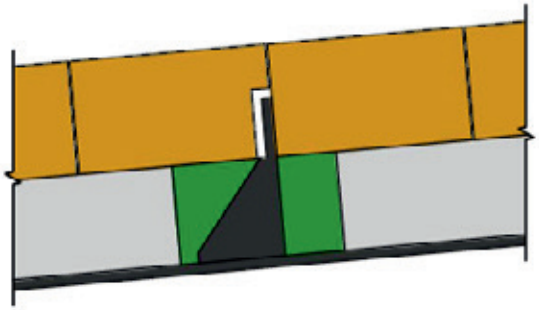

Grate cooler

The cooler is divided into two zones: the hot zone and the cold zone. In the hot zone, from the clinker downfall to the bypass duct and partition all, the heat is released and returned back to preheater via TAD. In the cold zone, when clinker temperature has dropped below 800°C, it is important to achieve a uniform temperature drop throughout the clinker bed.

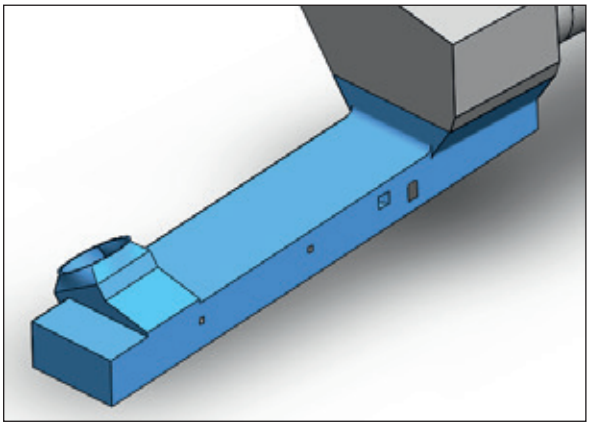

For extended refractory life and fastest possible installation at the clinker downfall, bull nose, front sidewalls and cooler benches it is possible to use refractory pre-cast blocks, so called Fire Bolts. They can be quickly bolted into place and easily removed.

The upper part of the walls will be installed with bricks, quality depending on the wear. To maximize heat recovery, the grate cooler and bypass duct should be lined with proper insulation materials.

Our suspended roof design is the best solution. It is also possible to use insulating on this roof, which makes it more flexible and prone to cracks, thus prolonging its lifetime.

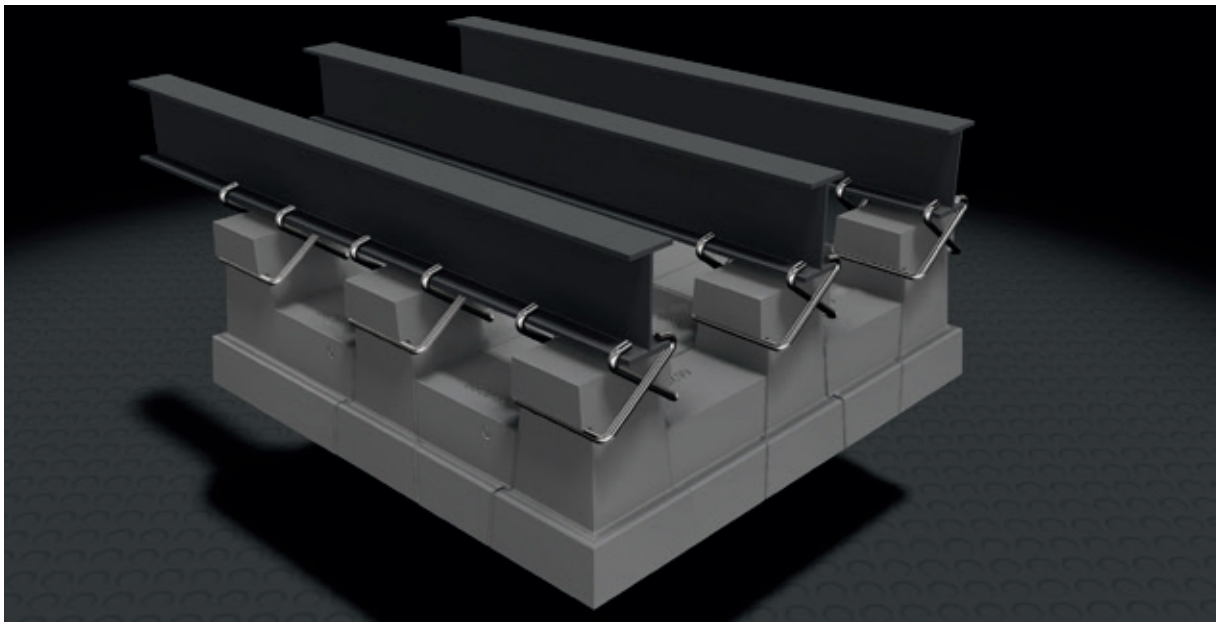

FIREBOLT® blocks

High-quality materials and additives, high manufacture precision, tight tolerances, as well as a unique installation method guarantee that our blocks are superior to other lining methods. Reduced installation time and cost and easier reparation also present huge benefits. All blocks are delivered already dried and cured, which makes new linings more stable.

The meal pipes and splash boxes that connect different cyclone stages usually have small diameters. Usually they come in short sections and their refractory lining can be pre-fabricated and dried-out before delivery, which prolongs the lifetime of the lining.

Thanks to our partner companies, we can also manufacture the steel parts. All firebolts are manufactured by Höganäs Borgestad.

Our customers have different problems and temperatures. A correct individual calculation can be provided for each of them.

Casting of splash boxes.

Casting of meal pipes.

Each plant is individual and the lining needs to be tailored to your specifcn eeds. The lining recommendations in this brochure are to be seen as guiding principles only. For a customized solution, please contact your local Höganäs Borgestad representative.

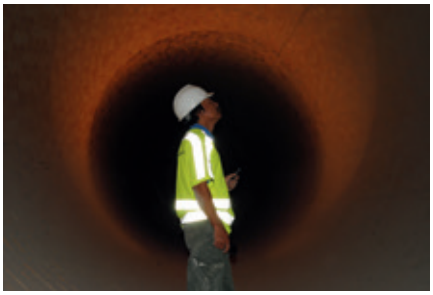



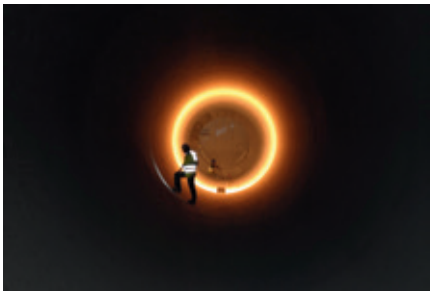

Our offices

HEAD OFFICE:

Höganäs Borgestad AB
Box 502
SE-267 25 BJUV, Sweden
Phone: +46 42 855 00
Fax: +46 42 855 66

REGIONAL OFFICES:

Höganäs Borgestad Asia Pacific Group Sdn. Bhd.
A-1-1, Seri Gembira Avenue
6 Jalan Senang Ria
Taman Gembira, 58200
Kuala Lumpur,
Malaysia
Phone: +60 3 7972 3183
Email: asiapacific@hoganasborgestad.com

Höganäs Borgestad Ltd.
24 Stasikratous Str., ELKA bldg.,
Office no. 204, 2nd floor,
CY 1065 Nicosia, Cyprus
Phone: +357 22 662406
Email: middleeast@hoganasborgestad.com

Web: www.hoganasborgestad.com
Mail: cement@hoganasborgestad.com

Höganäs Borgestad