Refractories for the cement industry

Höganäs Borgestad

Contents

The Cement Specialists

The special demands of cement manufacturing have always required specialized refractories – especially now, when more and more alternative fuels are used.

That's where we excel. Höganäs Borgestad refractory products improve profitability for cement manufacturers in more than 70 countries on six continents. We deliver refractory solutions that perform better, last longer, and give you lower refractory cost per ton of clinker produced – especially if you are burning alternative fuels.

Höganäs Borgestad is a multinational organization and member of Borgestad ASA. Our activities range from applications-driven R&D, production, distribution, support and service to complete refractory management, including wrecking and installation. R&D, production and corporate headquarters are located in Sweden, with sales and support in more than forty countries around the world.

How to contact us

Höganäs Borgestad is headquartered in Gävle, Sweden, with subsidiaries in Middle East, Malaysia and agents and representatives around the world.

Höganäs Borgestad Holding AB

Elektrikergatan 1
802 91 Gävle
Sweden

Tel: +46 26 12 01 00

To find your local contact, please call us at the number above. Up-to-date contact information can also be found at: www.hoganasborgestad.com

Comprehensive product range

Each step of the cement making process is different, putting different demands on the refractories lining it. No single refractory, or refractory type, suits all applications. That's why we offer a complete range of refractory products, tailored to each production step. Our revolutionary products set performance benchmarks for the refractories industry, including:

- Victor 60 RK, Victor 70 RK, Victor 80 RK, Viking 330, Viking 450, Alex and Alsic 500 bricks
- HÖGANÄS CAST LC 50AR, HÖGANÄS CAST LC 801, HÖGANÄS CAST LC S10, HÖGANÄS CAST LC S30, HÖGANÄS CAST CC 30, HÖGANÄS CAST CC 40 and HÖGANÄS CAST CC S10 castables
- Prefabricated blocks
- Various insulation materials
- Various anchoring solutions
- CoroTexPro corrosion protection
- Linometer XLNT lining measurement instrument
- Paddle mixers

Responsiveness and know-how

We have the resources, know-how and products to answer your refractory needs, and we are committed to providing first-class service for both refractory and process problems.

We guarantee a quotation to you by return mail or fax on any item within our standard range of products. We can offer customized solutions, though they require more time, as quickly as humanly possible.

From the detailed pre-delivery consultation and installation follow-up that is part of our basic contract through to complete Refractory Management, we can supply the level of service you require. Our consultants and technicians are always available to serve your needs and answer your questions.

Quality Assurance throughout

Our Quality Assurance systems are fully ISO 9001 accredited. From regular review of our own suppliers and their QA systems to continuous sampling of raw materials, we maintain strict control over the quality of the product entering our production system.

This is just the beginning. Every aspect of our modern, automated production is monitored and controlled, employing statistical process control methods. Quality Assurance is a commitment which each of us makes personally, to ensure quick feedback and uniform high quality.

All products leaving our Höganäs Borgestad plant have been quality-checked and approved.

BUREAU VERITAS
Certification

Certification
Awarded to
Höganäs Bjuf AB
Bjuv, Sweden

Bureau Veritas Certification certify that the Management System of the above organisation has been audited and found to be in accordance with the requirements of the management system standard detailed below

Standard

SS-EN ISO 9001: 2008

Scope of supply

Development and production of refractory bricks as well as design and sales of refractory linings.

Original Approval Date: 16 January 1996 (Previously certified by other accredited certification body)
Original Approval Date: 30 January 2014 (Bureau Veritas Certification)

Subject to the continued satisfactory operation of the organisation's Management System, this certificate is valid until: **14 September 2018**
To check this certificate validity please call +46 31 60 65 00
Further clarifications regarding the scope of this certificate and the applicability of the management system requirements may be obtained by consulting the organisation.

Mikael Lindström, Technical Manager, Bureau Veritas Certification Sverige AB

Date: 28 October 2015

Certificate Number: SE004458-1

SWEDAC ACKREDITERING 1236 ISO/IEC 17021

Bureau Veritas Certification Sverige AB, Frölundagatan 15, 412 50 GÖTEBORG, Sverige

Electronic copy only

Affiliated manufacturers

In order to provide you with comprehensive refractory solutions, Höganäs Borgestad works closely with producers of complementary refractory materials and the other components necessary for refractory installations. Our global network of approved suppliers guarantees you qualified refractory installations.

Refractories in the cement process

1. Preheater
2. Kiln hood
3. Cooler
4. Tertiary air duct

The kiln is presented in a separate brochure

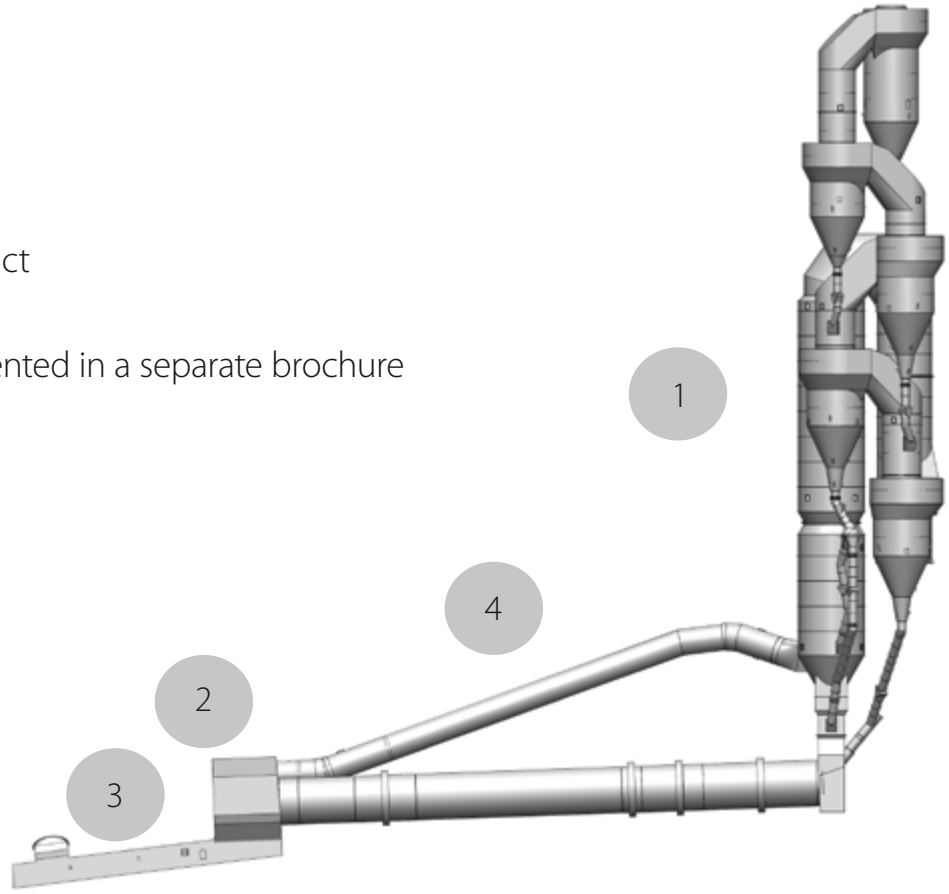

Each stage in the cement making process places unique demands on the refractory lining. Your refractory selection is influenced by your choice of raw meal, the type(s) of fuel you burn and your kiln's design and operating characteristics.

From raw meal to ready clinker, you will find a chapter covering each primary stage in the cement making process with our suggestions for how to achieve long-lasting and cost-effective refractories. For each stage we present solutions for both standard and alternative fuel installations. The process and external shell temperatures noted are statistical approximations and are based on an ambient temperature of +20°C.

2. Preheater

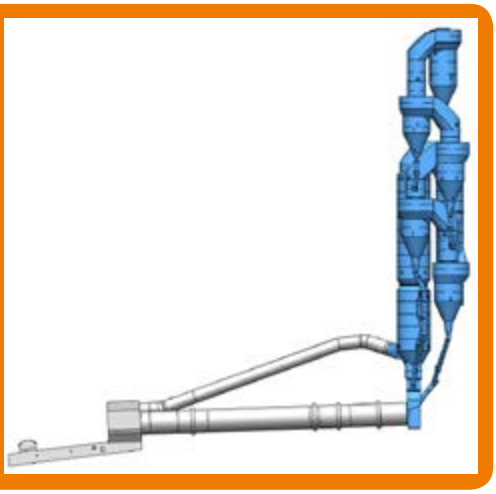

1. Cyclone stage I
2. Cyclone stage II
3. Cyclone stage III
4. Cyclone stage IV
5. Cyclone stage V

with connecting duts and calciner

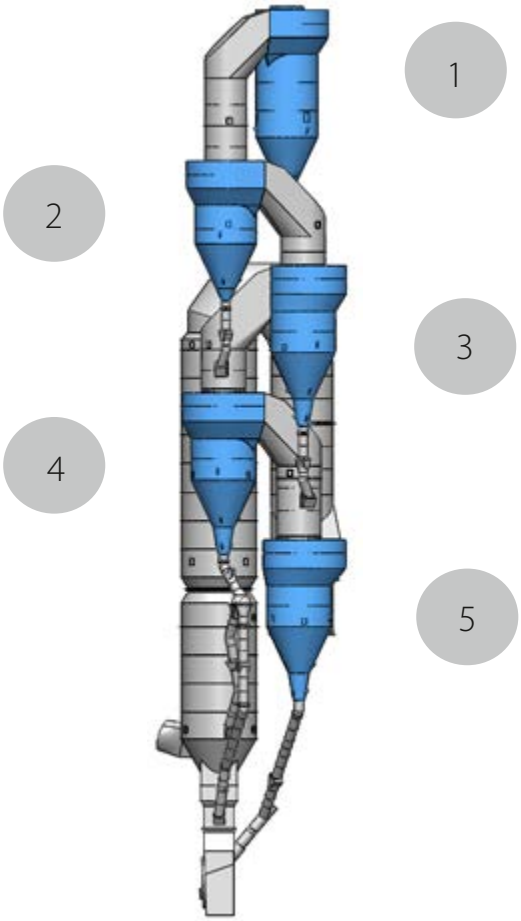

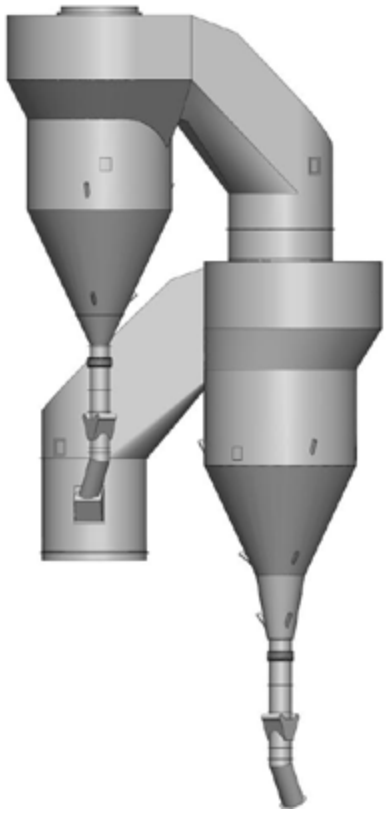

Plant design has evolved rapidly since the beginning of the 20th century, to meet the needs of modern cement production.

The preheater system is now a major factor in efficient cement production, thanks to growing production volumes and increasing energy costs. Its design and complexity have evolved rapidly.

These advances deliver both capacity and energy benefits. Today's dry process kilns, coupled to multiple stage preheater systems, offer 20 times more capacity than similarly sized wet process kilns. The thermal efficiency and capacity of a modern cement making operation is very high but it can be even higher.

On the following pages, we deal specifically with the following areas of the preheater:

- Cyclones (including connecting ducts)
- Calciner
- Smoke chamber and riser ducts
- Meal pipes

Cyclones and connecting ducts

The cyclone system is the key to an efficient modern kiln. Each cyclone system is unique, its design, construction and operating characteristics decided by such factors as:

- The raw meal it processes
- Nominal and peak throughput
- The combination of fuels burned, particularly alternative fuels burned at the calciner and/or smoke chamber
- The design of subsequent process steps

Today, each new cyclone system must answer two major needs: greater thermal efficiency and greater kiln capacity. Both place heavy demands on refractory linings, anchor systems and expansion joints:

- To operate under increasingly high temperatures
- To withstand the chemical attack of alkalis, chlorine, sulfur and transition metals
- To meet the construction requirements of ever larger cyclone units
- To provide the smooth, non-wetting surfaces that support optimal airflow and reduce or eliminate build-ups.

The operational requirements of most modern cyclones include increasingly larger diameters, which challenges refractory stability and higher operating temperatures, which increases the risk of alkali & chloride penetration. Build-ups are also related to chemical attack and to the cyclone's increasingly complex design.

Large cyclone diameters

Increasingly large cyclone diameters make it difficult to keep bricks in place in the vertical sections. To meet this challenge, Höganäs Borgestad developed the CY brick, which has an interlocking profile that allows adjacent bricks to support each other.

Higher operating temperatures

Higher operating temperatures, particularly in the lower cyclones, require use of refractories with high refractoriness and high strength. With higher temperatures, corrosive vapors can penetrate higher into the cyclone system, so alkali- and chloride-resistant refractories should be used.

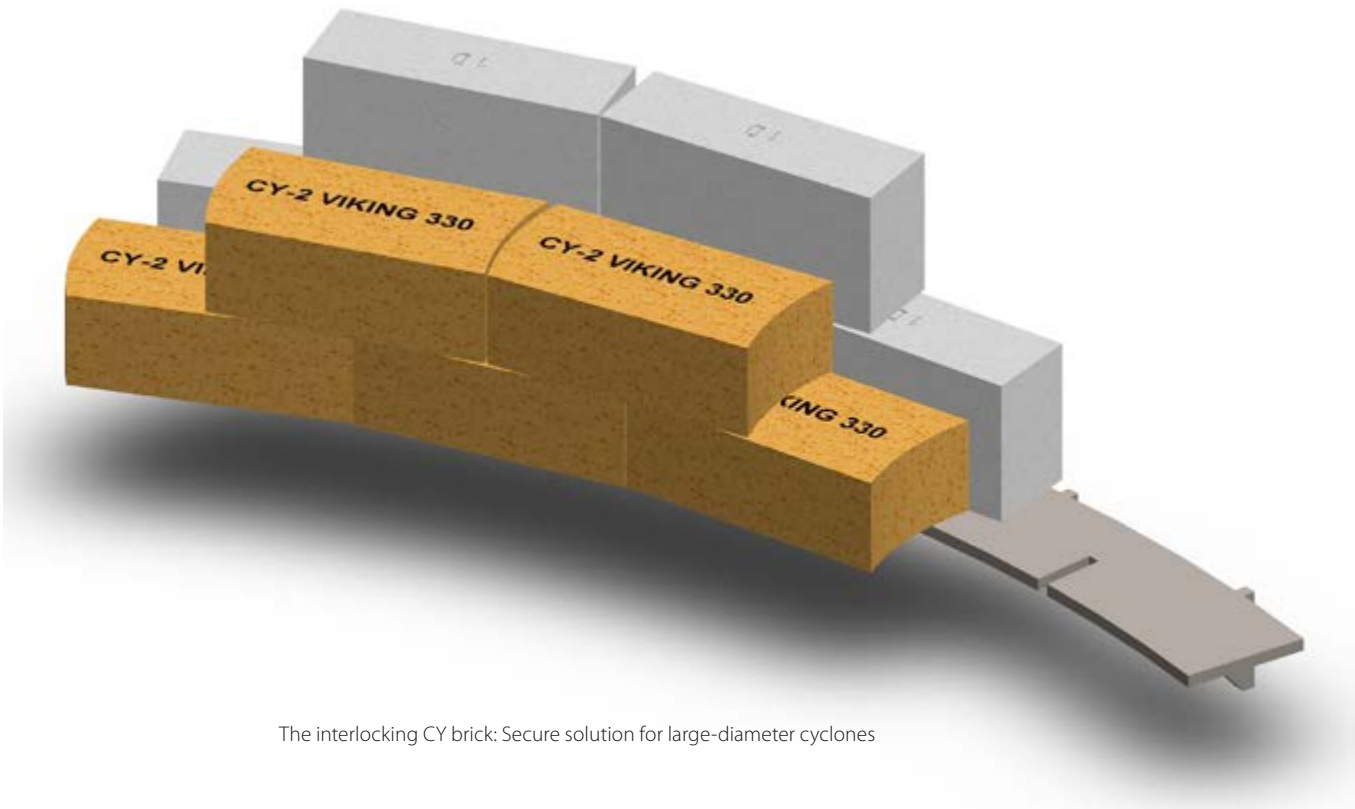

The interlocking CY brick: Secure solution for large-diameter cyclones

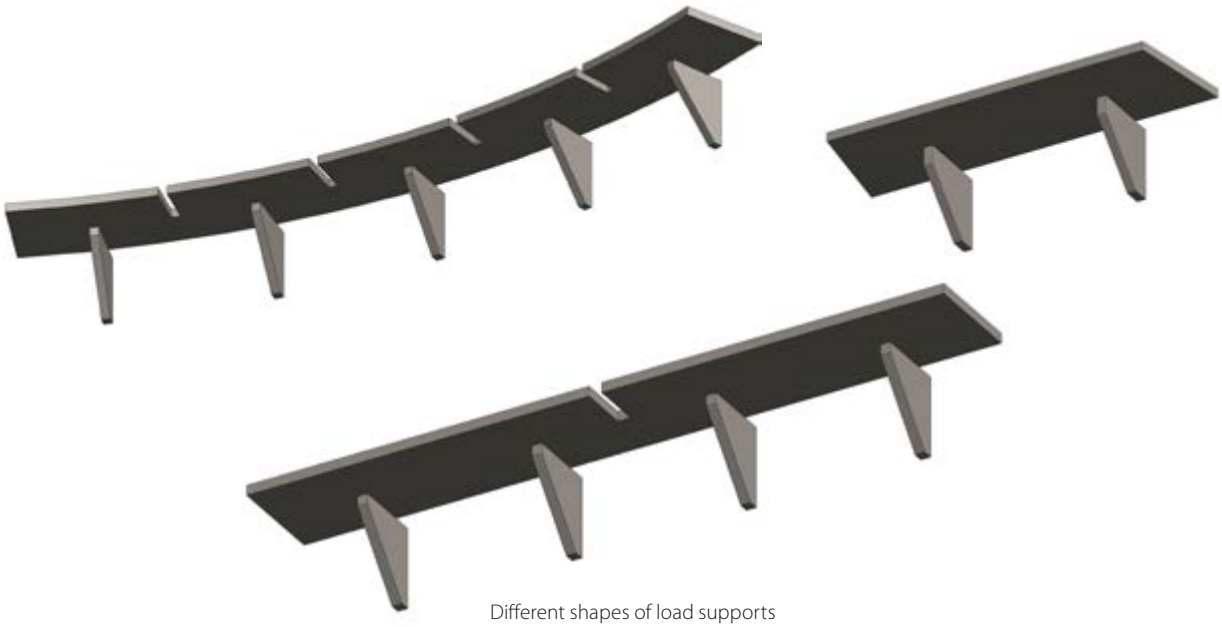

Different shapes of load supports

Build-ups

Usually caused by chemical attack in combination with venturi effect in the cyclone's complex design. Build-ups can also be caused by rapid temperature drops due to air leakage.

Build-ups reduce cyclone efficiency and their removal ultimately requires a production stop. Regardless of the method used, removal is dangerous work. In the most severe cases, explosives are used. Several mechanical alternatives exist, none of which is particularly satisfactory:

- Manual removal is time consuming, ineffective and unsafe.
- Waterblast, though effective, requires production stoppage and exposes linings to severe thermal shock.
- Air canons place high demands on the strength of the refractory installation.

The best option, however, is a refractory that eliminates or minimizes build-ups, such as Alsic 500 bricks and HÖGANÄS CAST LC S30 castable. In very severe condi-tion areas, this solution can be sucessfully combined with air canons.

Final effect after 1 campain: Thin build ups, wall without abrasion. Alsic 500 bricks like new, no cracks, no alkali infiltration.

Riser duct after 21 months in operation, lined with HÖGANÄS CAST LC S30

Alkali & chloride penetration

Chemical attack in the form of alkali penetration is unavoidable in cement production. The worst damage occurs in lower cyclone stages and riser ducts, kiln inlets and even recliners. Alkali- and acid vapors infiltrate the refractory linings and attack the binding phase at temperatures as low as 600-700°C, thus endangering the lining.

When these gases penetrate behind the refractories, the effects are even worse. Cl_2 and SO_2 combine with condensing steam to form acids that corrode anchors. Left unchecked, this can lead to lining collapse.

The safest, most cost-effective method to deal with this? Reduce the amount of insulation used, in order to move the vapor's 'dewpoint' outside the shell of the cyclone. If refractory and cyclone external shell temperatures remain above 100°C, ambient moisture and chemical vapors will not condense.

Regular test are done for measuring alkali penetration. The photo shows Viking 330 brick with extremly good resistance against alkalis.

Lining your cyclone

Following is Höganäs Borgestad's expert suggestion for lining your cyclone system, both for standard and alternative fuels. Cyclone roof linings usually depend on the type of cyclone construction. Therefore, they are not detailed here. We are ready to provide you with a proposal once details are known, so please feel free to contact us.

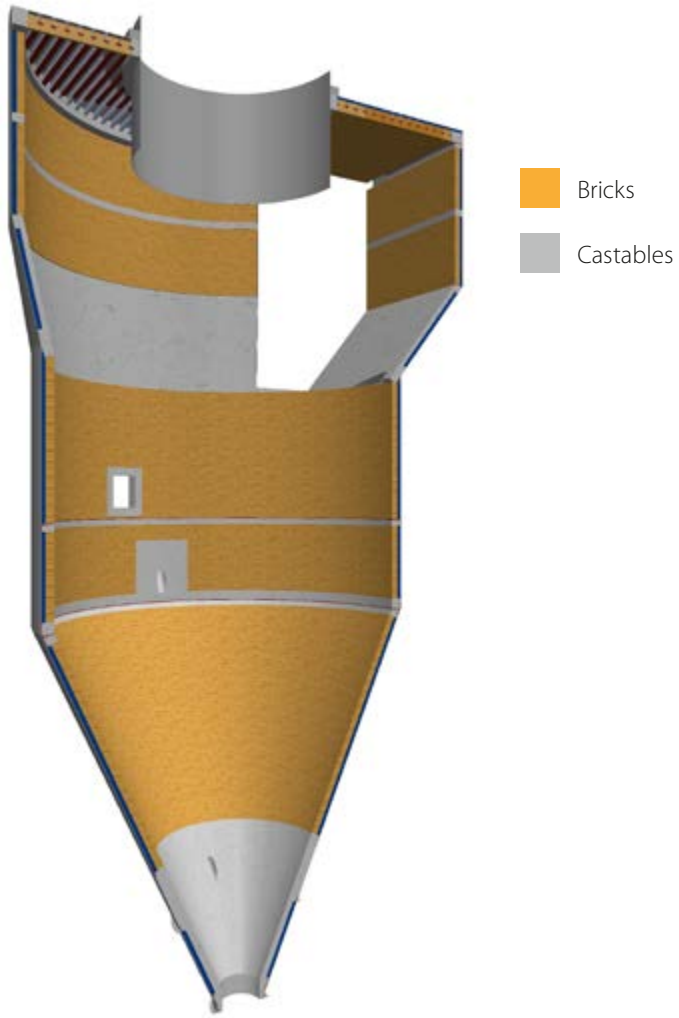

Bricks, precast blocks or monolithic?

It is commonly believed that casting, gunning and shot-gunning are faster, and therefore less expensive than installing bricks.

The simple truth is quite the opposite.

Compared to castables and gunnables, bricks are simple to install and ready to use immediately. It is a finished product: pressed, fired and quality controlled before delivery. It offers a more cost effective solution than a monolithic with the same properties.
We therefore suggest you use brick or precast blocks wherever possible.

However, complex geometries will always need to be cast or gunned.

Estimated time in man hours needed for installing 1 m² of lining. Wall thickness 215 mm (100 mm insulation & 115 mm hot face layer)

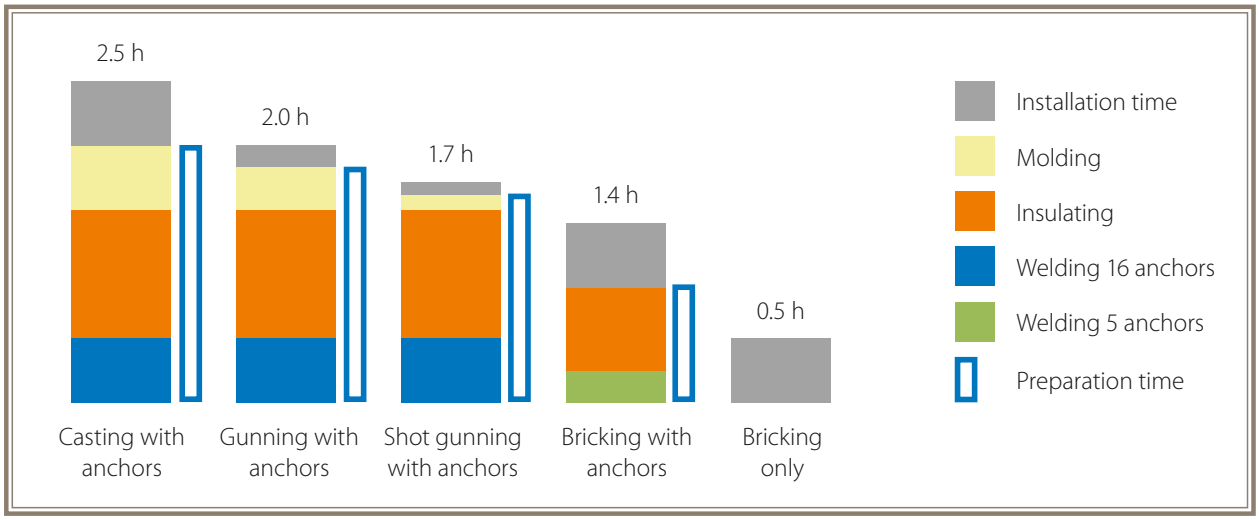

CYCLONE STAGE 1

Refractory lining thickness: 114 mm
Process temp ~ 306 °C
External shell temp ~ 97 °C

	BRICK	MORTAR	MONOLITHICS	ANCHORS	INSULATION
STANDARD	Viking 330	Höganäs H-15	HÖGANÄS CAST CC 30	Stainless steel EN 1.4301	SUPER 1100 E/Slabs HIPOR 450/brick
ALTERNATIVE FUELS	Viking 330	Höganäs H-15	HÖGANÄS CAST CC 40	Stainless steel EN 1.4301	SUPER 1100 E/Slabs HIPOR 450/brick

CYCLONE STAGE 2

Refractory lining thickness: 114 mm
Process temp ~ 503 °C
External shell temp ~ 142 °C

	BRICK	MORTAR	MONOLITHICS	ANCHORS	INSULATION
STANDARD	Viking 330	Höganäs H-15	HÖGANÄS CAST CC 30 HÖGANÄS CAST CC 40	Stainless steel EN 1.4301	SUPER 1100 E/Slabs HIPOR 450/brick
ALTERNATIVE FUELS	Viking 330	Höganäs H-15	HÖGANÄS CAST CC 30 HÖGANÄS CAST CC 40	Stainless steel EN 1.4301	SUPER 1100 E/Slabs HIPOR 450/brick

CYCLONE STAGE 3

Refractory lining thickness: 146 mm
Process temp ~ 665 °C
External shell temp ~ 132 °C

	BRICK	MORTAR	MONOLITHICS	ANCHORS	INSULATION
STANDARD	Viking 330	Höganäs H-15	HÖGANÄS CAST LC 40 AR	Stainless steel EN 1.4301	SUPER 1100 E/Slabs HIPOR 450/brick
ALTERNATIVE FUELS	Viking 330	Höganäs H-15	HÖGANÄS CAST LC 40 AR	Stainless steel EN 1.4301	SUPER 1100 E/Slabs HIPOR 450/brick

CYCLONE STAGE 4

Refractory lining thickness: 180 mm
Process temp ~ 806 °C
External shell temp ~ 155 °C

	BRICK	MORTAR	MONOLITHICS	ANCHORS	INSULATION
STANDARD	Viking 330	Höganäs H-15	HÖGANÄS CAST /GUN LC 50 AR	Stainless steel EN 1.4835	SUPER 1100 E/slabs, HIPOR 450/ brick, HÖGANÄS INSUL CC 1,5L
ALTERNATIVE FUELS	Viking 330 Alsic 500	Höganäs H-15	HÖGANÄS CAST /GUN LC S10	Stainless steel EN 1.4835	SUPER 1100 E/slabs, HIPOR 450/ brick, HÖGANÄS INSUL CC 1,5L

CYCLONE STAGE 5

Refractory lining thickness: 230 mm
Process temp ~ 890 °C
External shell temp ~ 134 °C

	BRICK	MORTAR	MONOLITHICS	ANCHORS	INSULATION
STANDARD	Viking 330	Höganäs T Cement	HÖGANÄS CAST /GUN LC 50 AR	Stainless steel EN 1.4835	SUPER 1100 E/slabs, HIPOR 450/ brick, HÖGANÄS INSUL CC 1,5L
ALTERNATIVE FUELS	Viking 330 Alsic 500	Höganäs H-15 Höganäs T Cement	HÖGANÄS CAST /GUN LC S10	Stainless steel EN 1.4835	SUPER 1100 E/slabs HIPOR 450/brick HÖGANÄS INSUL CC 1,5L

Calciner

Re-cycling heated air delivered from the grate cooler via the tertiary duct, the calciner dramatically improves thermal efficiency in the cyclone system.

It also reduces fuel costs by optimizing the use of cheaper waste and low-grade alternative fuels. However, there are some special considerations for lining the calciner, and appropriate refractory precautions must be taken when burning waste fuels.
Because of higher operating temperature, chemical attack is a more severe problem in the calciner than in the cyclones. High refractoriness and good resistance to thermal shock are also necessary, especially around the burner blocks.

Correct insulation is important, but risk of chemical attack must also be considered. High operating temperature combined with the dense calciner refractories can lead to substantial heat loss if insufficient. The optimal solution must balance this against the risk of chemical attack.

If you use alternative fuels in the calciner...

Alternative fuels often cause operational or refractory problems, such as:

- Early wear on center pipes in the hotter cyclones.
- Clogging in the riser duct.
- Penetration of chemicals into the refractories, resulting in capping and alkali attack on the refractories and metal components such as anchors, joints and shell.

...We can prolong the life of refractories

We supply the products that you need to successfully combat the negative effects of alternative fuels:

- HÖGANÄS CAST LC S10, HÖGANÄS CAST LC S30 and HÖGANÄS CAST LC 50AR castables and gunnables which are high alkali and abrasion resistant materials.
- Viking 330 bricks have low porosity as well as high alkali and abrasion resistance.
- CoroTexPro is corrosion and abrasion resistant protection for exposed metal surfaces.

Damage caused by chemical attack and unsufficient expansion joints.

Brick or monolithic?

Because of the high temperatures and chemically aggressive atmosphere of the calciner, we suggest you use only brick lining. If the decision is made to use monolithics in the roof section, remember that high temperatures require refractories with high refractoriness and hot strength. Clinker dust transported through the tertiary duct also requires that these refractories have high abrasion resistance. The Höganäs Borgestad range of castables meets all these requirements.

Lining your calciner

Höganäs Borgestad experts suggest lining your calciner in three key areas: cone, walls and roof which are specified individually in following table.

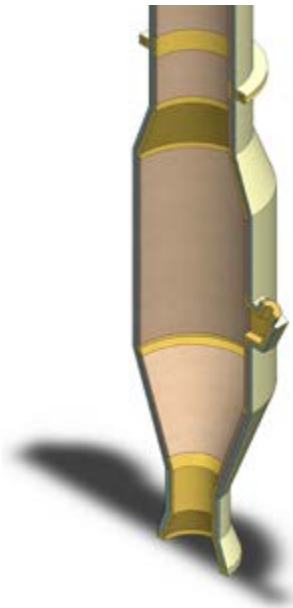

CALCINER - UPPER SECTION

Refractory lining thickness: 230 mm
Process temp ~ 900 °C
External shell temp ~ 135 °C

	BRICK	MORTAR	MONOLITHICS	ANCHORS	INSULATION
STANDARD	Viking 330	Höganäs H-15	HÖGANÄS CAST /GUN LC 50 AR	Stainless steel EN 1.4835	HÖGANÄS INSUL M E/brick HIPOR 450/brick SUPER 1100 E/slabs HÖGANÄS INSUL CC 1,5L
ALTERNATIVE FUELS SEVERE CONDITIONS	Alsic 500 Silox 60	Höganäs H-15 Höganäs T Cement	HÖGANÄS CAST LC 60 AR, HÖGANÄS CAST LC 75 AR, HÖGANÄS CAST/GUN LC S10	Stainless steel EN 1.4835	HÖGANÄS INSUL M E/brick HIPOR 450/brick SUPER 1100 E/slabs HÖGANÄS INSUL CC 1,5L

CALCINER - LOWER SECTION

Refractory lining thickness: 230 mm
Process temp ~ 900 °C
External shell temp ~ 135 °C

	BRICK	MORTAR	MONOLITHICS	ANCHORS	INSULATION
STANDARD	Viking 330	Höganäs H-15	HÖGANÄS CAST /GUN LC 50 AR	Stainless steel EN 1.4835	HÖGANÄS INSUL M E/brick HIPOR 450/brick, SUPER 1100 E/slabs, HÖGANÄS INSUL CC 1,5L
ALTERNATIVE FUELS SEVERE CONDITIONS	Alsic 500 Silox 60	Höganäs T Cement	HÖGANÄS CAST LC 60 AR HÖGANÄS CAST LC 75 AR HÖGANÄS CAST/GUN LC S10	Stainless steel EN 1.4835	HÖGANÄS INSUL M E/brick HIPOR 450/brick, SUPER 1100 E/slabs, HÖGANÄS INSUL CC 1,5L

CALCINER CONES

Refractory lining thickness: 254 mm
Process temp ~ 1,100 °C
External shell temp ~ 156 °C

	BRICK	MORTAR	MONOLITHICS	ANCHORS	INSULATION
STANDARD	Alex	Höganäs T Cement	HÖGANÄS CAST /GUN LC 50 AR	Stainless steel EN 1.4835 Ceramic	HÖGANÄS INSUL M E/brick HIPOR 450/brick SUPER 1100 E/slabs HÖGANÄS INSUL CC 1,5L
ALTERNATIVE FUELS SEVERE CONDITIONS	Alsic 500 Silox 60	Höganäs T Cement	HÖGANÄS CAST LC 60 AR HÖGANÄS CAST LC 75 AR HÖGANÄS CAST/GUN LC S10	Stainless steel EN 1.4835 Ceramic	HÖGANÄS INSUL M E/brick HIPOR 450/brick SUPER 1100 E/slabs HÖGANÄS INSUL CC 1,5L

Start each cone section by setting a ring of refractory brick at the narrowest section of the cone. This provides a foundation for subsequent bricking.

Riser duct

The riser ducts recycle heated air from lower cyclone stages and the kiln itself, thus improving thermal efficiency and reducing fuel costs. The refractory choices are listed below.

In the lower, hotter part of the preheater system, chemical influences are the cause and can affect both straight and curved duct sections. Riser duct connected to calciner suffers often from build-up problems. In riser ducts connected to cyclones, build-ups are usually caused by a venturi effect. This occurs mostly in the curved sections of the duct.

The closer the duct is to the 'hot' end of the preheater system, the greater the risk of alkali penetration and refractory spalling. Where alkalis have penetrated to a depth of 20-30 mm, the refractory can expand 10 times more than normal, causing spalling. If this process is allowed to continue, the wall could collapse. To keep alkaline vapor from condensing, the amount of insulation should be reduced.

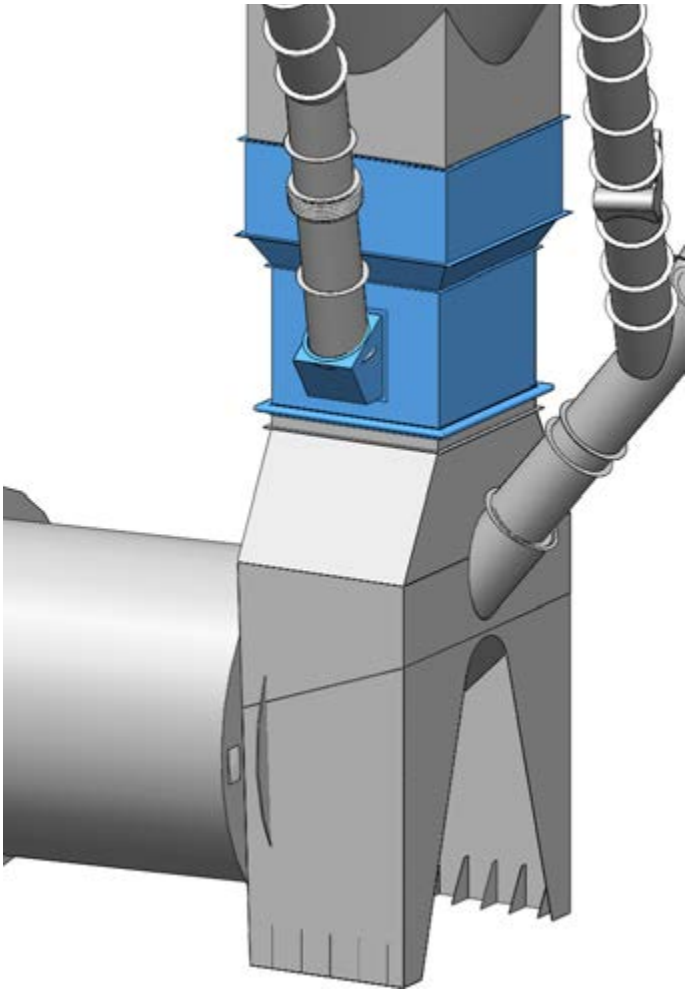

RISER DUCT

Refractory lining thickness: 230 mm
Process temp ~ 1,000 - 1,100 °C
External shell temp ~ 100 - 150 °C

	BRICK	MORTAR	PRECAST / MONOLITHICS	ANCHORS	INSULATION
STANDARD	Viking 330	Höganäs H-15	HÖGANÄS CAST /GUN LC 50 AR	Stainless steel EN 1.4835 Ceramic	HÖGANÄS INSUL M E/brick HIPOR 450/brick SUPER 1100 E/slabs HÖGANÄS INSUL CC 1,5L
ALTERNATIVE FUELS	Alsic 500 Silox 60	Höganäs T Cement	HÖGANÄS CAST LC 60 AR HÖGANÄS CAST LC 75 AR HÖGANÄS CAST/GUN LC S10	Stainless steel EN 1.4835 Ceramic	HÖGANÄS INSUL M E/brick HIPOR 450/brick SUPER 1100 E/slabs HÖGANÄS INSUL CC 1,5L

Smoke chamber

The smoke chamber is subject to all the worst exposure that cement manufacturing can cause such as alkali attack, build-ups, anchor corrosion and high temperatures (~1300°C). The refractory choice is simple: a high-density, low cement castable such as HÖGANÄS CAST LC 50AR or HÖGANÄS CAST LC S30 to ensure long and trouble-free operation. In some locations, you can also use HÖGANÄS CAST LC S60.

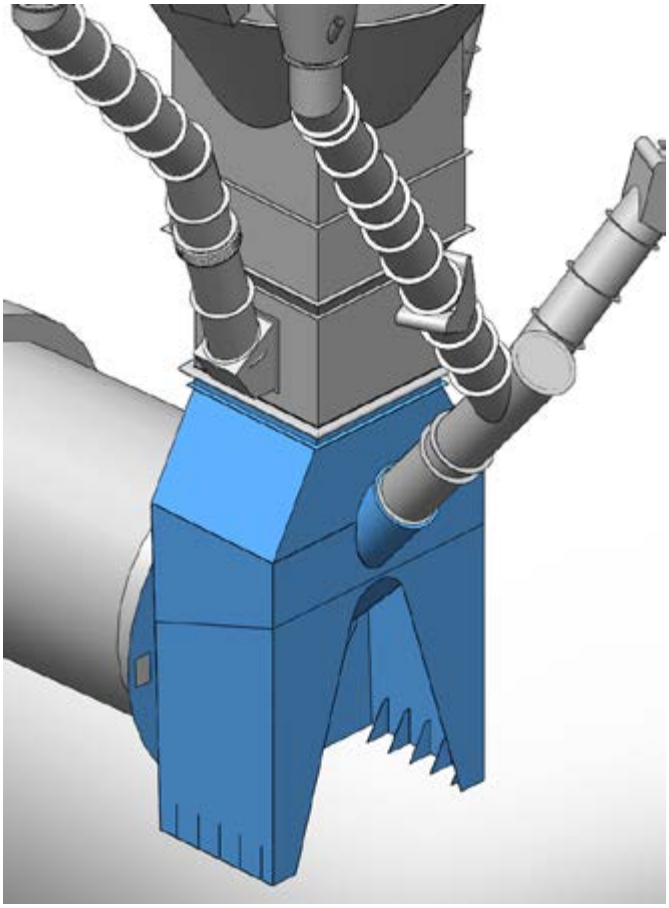

SMOKE CHAMBER

Refractory lining thickness: 254 mm
Process temp ~ 1,100 °C
External shell temp ~ 156 °C

	BRICK	MORTAR	PRECAST / MONOLITHICS	ANCHORS	INSULATION
STANDARD	Viking 330 Alex	Höganäs H-15	HÖGANÄS CAST /GUN LC 50 AR	Stainless steel EN 1.4835 Ceramic	HÖGANÄS INSUL M E/brick HIPOR 450/brick Super1100E/slabs Porosil 23/brick HÖGANÄS INSUL CC 1,5L
ALTERNATIVE FUELS	Alsic 500	Höganäs T Cement	HÖGANÄS CAST LC 60 AR HÖGANÄS CAST LC 75 AR HÖGANÄS CAST/GUN LC S10	Stainless steel EN 1.4835 Ceramic	HÖGANÄS INSUL M E/brick HIPOR 450/brick Super1100E/slabs Porosil 23/brick HÖGANÄS INSUL CC 1,5L

Meal pipes

The meal pipes that connect different cyclone stages usually have small diameters. They may be lined with either bricks or castable. Viking 330 bricks and HÖGANÄS CAST CC 30, HÖGANÄS CAST CC 40 castables are the suitable refractory alternatives. Meal pipes usually come in short sections and their refractory lining can be prefabricated to enable quick installation.

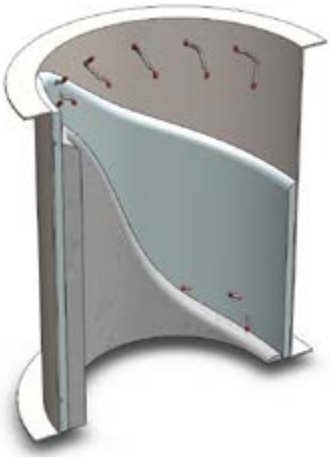

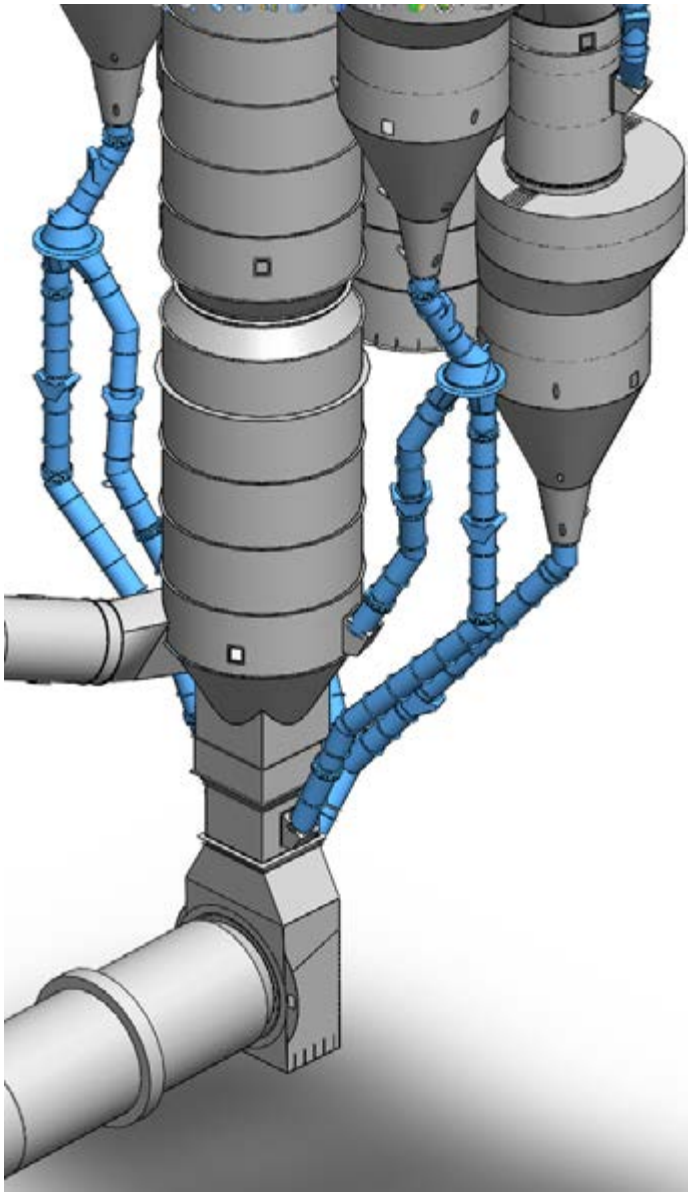

MEAL PIPES

Refractory lining thickness: 0-100 mm

Process temp ~ 300-800 °C

	BRICK	MORTAR	MONOLITHICS	ANCHORS	INSULATION
STANDARD	Viking 330	Höganäs H-15	HÖGANÄS CAST CC 30 HÖGANÄS CAST CC 40	Stainless steel EN 1.4301 ; for lower splash box use stainless steel EN 1.4835	SUPER 1100 E/slabs or nothing
ALTERNATIVE FUELS	Viking 330	Höganäs H-15	HÖGANÄS CAST CC 30 HÖGANÄS CAST CC 40	Stainless steel EN 1.4301 ; for lower splash box use stainless steel EN 1.4835	SUPER 1100 E/slabs or nothing

3. Kiln hood

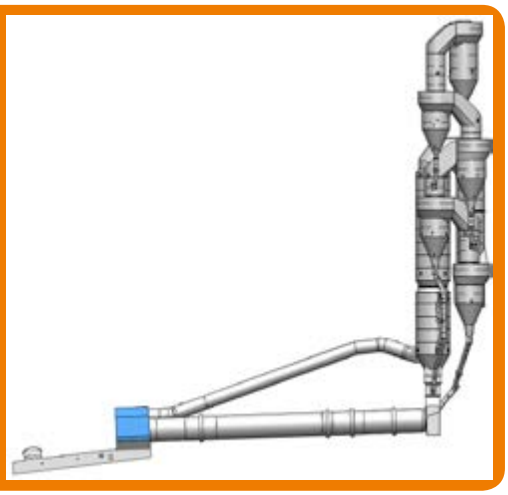

Kiln hood

Low thermal conductivity and abrasion resistance are important for refractories at the kiln hood and burner lead-in. Waste fuels can require chemical resistant material.

If kiln hood design has complicated geometry and brick installation is difficult, a good alternative is castable lining.

Castable lining should be combined with ceramic anchors for imroved chemical resistance.

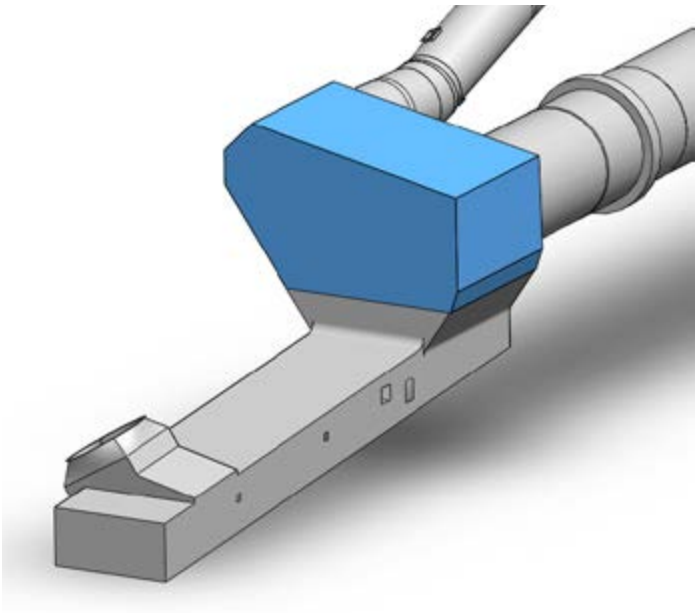

KILN HOOD

Refractory lining thickness: 250 - 350 mm

	BRICK	MORTAR	PRECAST / MONOLITHICS	ANCHORS	INSULATION
STANDARD	Silox 60 Victor 60,70,80RK	Höganäs T Cement	HÖGANÄS CAST /GUN LC 50 AR	Stainless steel EN 1.4835 Ceramic	HÖGANÄS INSUL M E/brick HIPOR 450/brick Super 1100E/slabs, Porosil 23 HÖGANÄS INSUL CC 1,5L
ALTERNATIVE FUELS	Silox 60 Victor 80RK	Höganäs T Cement	HÖGANÄS CAST LC 60 AR HÖGANÄS CAST LC 75 AR HÖGANÄS CAST/GUN LC S10	Stainless steel EN 1.4835 Ceramic	HÖGANÄS INSUL M E/brick HIPOR 450/brick Super 1100E/slabs, Porosil 23 HÖGANÄS INSUL CC 1,5L

4. Cooler and tertiary air duct

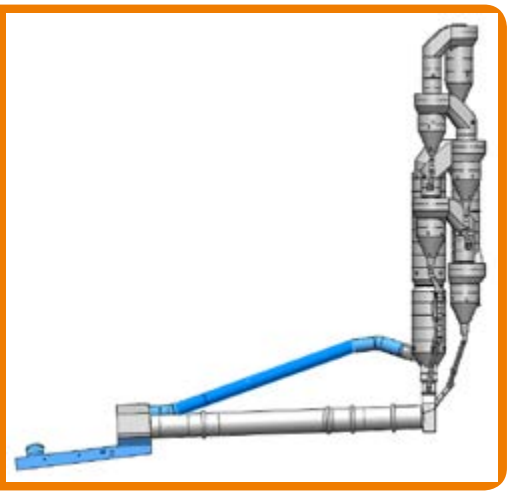

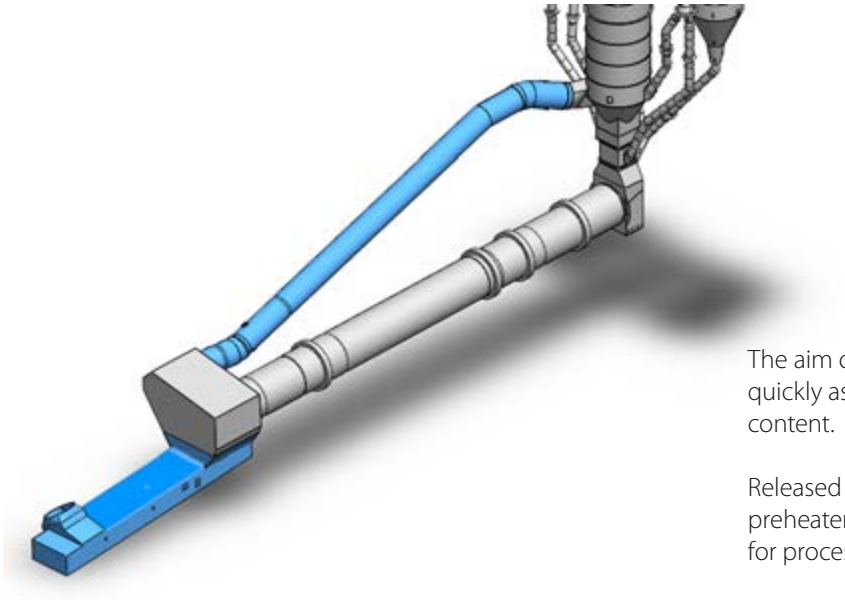

The aim of any cooling system is to cool clinker as quickly as possible as well as to set and maximize C_3S content.

Released heat is transfered by tertiary air duct back to preheater system minimizing the total enegy needed for process running.

Grate cooler

Clinker enters the cooler at a temperature of around 1200 °C rapidly spreading it's heat into the grate and surrounding refractories. High refractoriness, high abrasion resistance and resistance to thermal shock are necessary, especially at the clinker downfall and bull nose. The cooler benches are also subject to extreme wear.

The partition wall designed to limit the inflow of cool air to the kiln system must withstand the abrasive effect of clinker dust entering the tertiary air duct as well as the temperature fluctuations resulting from its exposed position.

Tertiary air duct

Recycling of the heat by using TAD is important to make cement production economical and environmentally friendly. The tertiary air duct helps to recover valuable energy.

Air from the grate cooler is filled with highly abrasive clinker dust as well as residual alkali vapors. Travelling through the tertiary air duct at a velocity of 25-30 m/s and an initial temperature of about 1050 °C wears down the lining, particularly at bends and dampers. Abrasion resistance and alkali resistance are both important in tertiary air duct refractories.

Grate cooler

The cooler is divided in two zones: the 'hot' zone and the 'cold' zone.

In the hot zone, from the clinker downfall to the bypass duct and partition wall, the heat is released and returned back to preheater via tertiary air duct.

In the cold zone, when clinker temperature has dropped below 800°C, it is important to achieve a uniform temperature drop throughout the clinker bed.

For extended refractory life and the fastest possible installation at the clinker downfall, bull nose, front sidewalls and roof, refractory precasts blocks, so called Firebolt can be used. They can be quickly bolted into place and easily removed.

Brick and monolithic design solutions should offer high refractoriness, abrasion-resistance and high cold crushing strength.

Bypass duct wear linings should be lined with Viking 330 bricks and HÖGANÄS CAST LC 50AR castable in order to withstand abrasive and alkaline effects of the tertiary airstream.

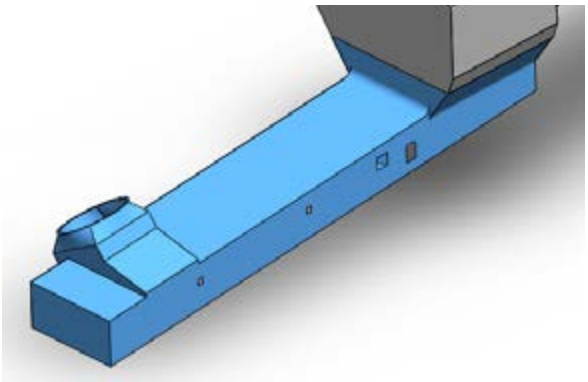

To maximize heat recovery, the grate cooler and bypass duct should be lined with proper insulation materials.

To achieve exceptionally long life in the partition wall separating the two zones, HÖGANÄS CAST LC 50AR precast blocks would be a superior solution.

Abrasion is the worst problem in the cold zone The optimal refractory alternative are Viking 330 bricks in combination with HÖGANÄS CAST LC 50AR castable.

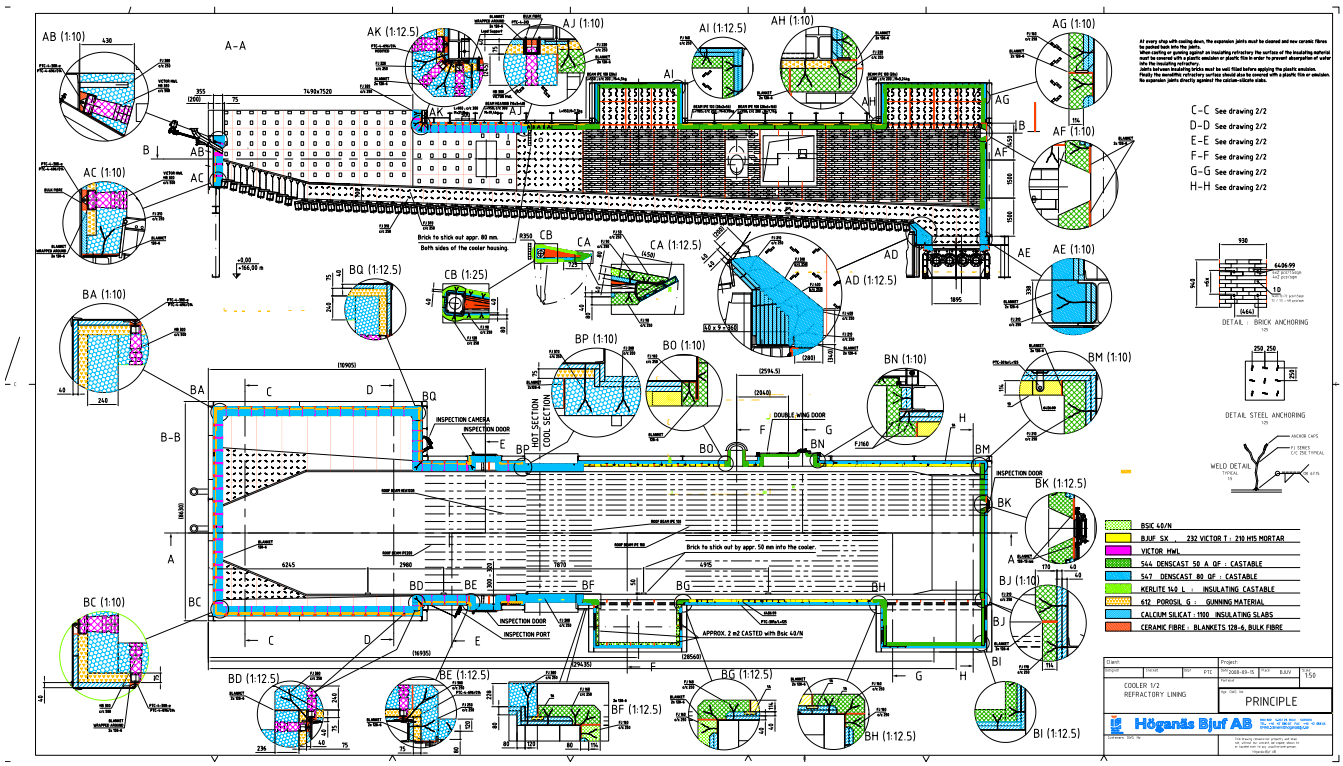

GRATE COOLER - "HOT" ZONE

Refractory lining thickness: 250 - 350 mm
Process temp ~ 1,000 - 1,200 °C

	BRICK	MORTAR	PRECAST / MONOLITHICS	ANCHORS	INSULATION
STANDARD	Silox60 Alsic 500 Alex Victor 80RK	Höganäs T Cement	Borgcast/Borgflow 85/Borg gel NC 85(Super abrasion resistance) HÖGANÄS LC S30 (Alkali+ Abrasion) HÖGANÄS CAST LC 75 AR (Alkali+Abrasion) HÖGANÄS GUN CC S101 (For roof gunning) HÖGANÄS GUN LC S30 (For other areas)	Stainless steel EN 1.4835 Ceramic	HÖGANÄS INSUL M E/brick HIPOR 450/brick Super 1100E/slabs Porosil 23 HÖGANÄS INSUL CC 1,5L
ALTERNATIVE FUELS	Alsic 500 Silox 60	Höganäs T Cement	Borgcast/Borgflow 85/Borg gel NC 85(Super abrasion, resistance) HÖGANÄS LC S30 (Alkali+ Abrasion) HÖGANÄS CAST LC 75 AR (Alkali+ Abrasion) HÖGANÄS GUN CC S101 (For roof gunning) HÖGANÄS GUN LC S30 (For other areas)	Stainless steel EN 1.4835 Ceramic	HÖGANÄS INSUL M E/brick HIPOR 450/brick Super 1100E/slabs Porosil 23 HÖGANÄS INSUL CC 1,5L

BULL NOSE

Refractory lining thickness: 300 - 400 mm
Process temp ~ 1,000 - 1,200 °C

	BRICK	MORTAR	PRECAST / MONOLITHICS	ANCHORS	INSULATION
STANDARD	Alex Victor 60 RK	Höganäs T Cement	Borgcast/Borgflow 85/Borg gel NC 85(Super abrasion resistance) HÖGANÄS LC S30 (Alkali+ Abrasion) HÖGANÄS CAST LC 75 AR (Alkali+ Abrasion) HÖGANÄS GUN CC S101 (For gunning) HÖGANÄS GUN LC S30	Stainless steel EN 1.4835 Ceramic	Super 1100E/slabs HÖGANÄS INSUL CC 1,5L
ALTERNATIVE FUELS	Alsic 500 Silox 60	Höganäs T Cement	Borgcast/Borgflow 85/Borg gel NC 85(Super abrasion resistance) HÖGANÄS LC S30 (Alkali+ Abrasion) HÖGANÄS CAST LC 75 AR (Alkali+ Abrasion) HÖGANÄS GUN CC S101 (For gunning) HÖGANÄS GUN LC S30	Stainless steel EN 1.4835 Ceramic	Super 1100E/slabs HÖGANÄS INSUL CC 1,5L

GRATE COOLER - "COLD" ZONE

Refractory lining thickness: 200 - 250 mm
Process temp < 800 °C

	BRICK	MORTAR	PRECAST / MONOLITHICS	ANCHORS	INSULATION
STANDARD	Viking 330 Alex	Höganäs H-15 Höganäs T Cement	Borgcast/Borgflow 85 (Super abrasion resistance), HÖGANÄS GUN LC S30 HÖGANÄS CAST 75 AR (Alkali+ Abrasion) HÖGANÄS CAST /GUN LC 50 AR	Stainless steel EN 1.4835	HÖGANÄS INSUL M E/brick HIPOR 450/brick Super 1100E/slabs Porosil 23
ALTERNATIVE FUELS	Viking 330 Alex	Höganäs H-15	Borgcast/Borgflow 85 (Super abrasion resistance) HÖGANÄS GUN LC S30 HÖGANÄS CAST 75 AR (Alkali+ Abrasion) HÖGANÄS CAST /GUN LC 50 AR	Stainless steel EN 1.4835	HÖGANÄS INSUL M E/ brick HIPOR 450/brick Super 1100E/slabs Porosil 23

Tertiary air duct

Our refractory suggestion for the tertiary air duct is straightforward:

- Alkali and abrasion resistant bricks in straight sections.
- Alkali- and abrasion-resistant low-cement castable in bends and parts exposed to venturi effect.

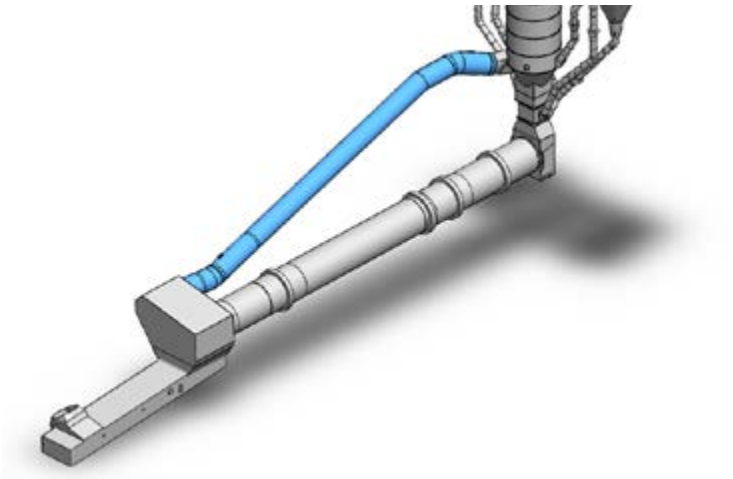

TERTIARY AIR DUCT

Refractory lining thickness: < 180 mm
Process temp ~ 1,000 - 1,100 °C

	BRICK	MORTAR	MONOLITHICS	ANCHORS	INSULATION
STANDARD	Viking 330 Silox60(TAD 5-10m)	Höganäs H-15	HÖGANÄS CAST /GUN LC 50 AR	Stainless steel EN 1.4835	HÖGANÄS INSUL M E/brick HIPOR 450/brick SUPER 1100 E/slabs HÖGANÄS INSUL CC 1,5L
ALTERNATIVE FUELS	viking 330 Silox60(TAD 5-10m)	Höganäs H-15	HÖGANÄS CAST LC 60 AR HÖGANÄS CAST LC 75 AR HÖGANÄS CAST/GUN LC S10	Stainless steel EN 1.4835	HÖGANÄS INSUL M E/brick HIPOR 450/brick SUPER 1100 E/slabs HÖGANÄS INSUL CC 1,5L

Installation of Viking 330 bricks in Tertiary Air Duct

CoroTexPro

The same alkaline atmosphere that plagues refractories also attacks anchors, load supports and casings by infiltration through, as well as condensation behind refractory linings. Anchors face the worst risk and their failure can lead to lining collapse.

As infiltration and condensation cannot be completely eliminated, it is best to take protective measures to guard metal surfaces against corrosion.

CoroTexPro provides a hard ceramic coating that effectively protects against corrosion and withstands prolonged high temperatures.

CoroTexPro is an inorganic binder for use as surface coating particularly in applications at high temperatures and where there are demands for an incombustible and acid proof product.

The CoroTexPro is applied by roller, brush or by dipping.

Application:

- Protection of stainless steel anchors
- Protection of kiln shells
- Protection of inside pre heater steel contstructions
- Protection of straigth wall lines in for instance coolers
- Steel areas which might be exposed to chemical and alkali attacks
- Repair coating for the inside of flue liners

Typical properties:

- CoroTexPro is a viscose liquid.
- The binder adheres to a great variety of materials and forms a very hard ceramic when cured.
- It may be cured at room temperature or at elevated temperature.
- Curing time of the binder at room temperature is about 1 hour.
- The binder retains it's effect at prolonged high temperatures (> 1300°C).
- Layers with a thickness up to about 2 mm may be applied without any formation of cracks or shrinkage when heated to 1300°C.
- When cured the binder is acid- and moisture proof and withstands alkali up to pH 10.
- Density of the cured binder is about 1800 kg/m^3.
- The binder is incombustible, non-toxic, releasing only water vapor during hardening or when heated.

FIRE BOLT® blocks

High quality materials and additives, high manufacture precision, tight tolerances, as well as unique installation method is a guaranty that our blocks are superior alternative to other lining methods. Reduced installation time and costs and easier reparations make a huge benefit for our customers. All blocks are delivered already dried and cured what makes new linings more stable.

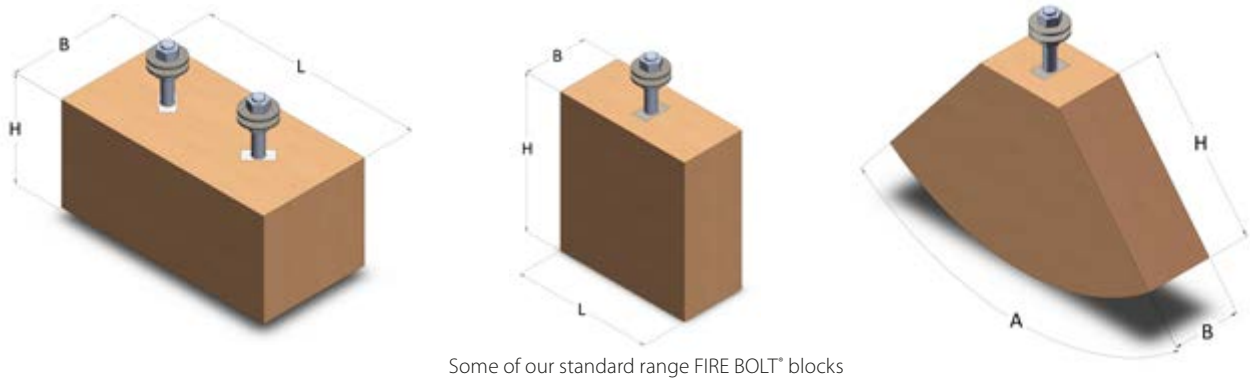

Some of our standard range FIRE BOLT® blocks

Some of our special shaped FIRE BOLT® blocks

Installation of blocks in cooler bull nose area

Conversion tools

MEASUREMENTS

Metric to Imperial

Multiply	By	To obtain
cm	0.393	inch
meter (m)	3.281	feet
meter (m)	1.094	yard
liter	0.2642	us gallon
kg	2.205	pound (lb)
metric ton	1.102	short ton
m/sec	1.94	knots
^{0}C + 17.78	1.8	^{0}F
kg/m^3	0.06242	lbs./cu.ft.(pcf.)
Mpa	142.23	lbs./sq.in.(psi.)
kp/cm^2	14.223	lbs./cu.ft.(pcf.)
(W/mK)	6.9347	Btu/(sq.ft.x h x ^{0}F/in)

Imperial to Metric

Multiply	By	To obtain
inch	2.540	cm
feet	0.304	meter (m)
yard	0.914	meter (m)
us gallon	3.785	liter
pound (lb)	0.454	kg
short ton	0.907	metric ton
knots	0.515	m/sec
^{0}F - 32	0.556	^{0}C + 17.78
lbs./cu.ft.(pcf.)	16.02	kg/m^3
lbs./sq.in.(psi.)	7.03 x 10^{-3}	Mpa
lbs./cu.ft.(pcf.)	7.03 x 10^{-3}	kp/cm^2
Btu/(sq.ft.x h x ^{0}F/in)	0.144	(W/mK)





Our offices

HEAD OFFICE:

Höganäs Borgestad AB
Box 502
SE-267 25 BJUV, Sweden
Phone: +46 42 855 00
Fax: +46 42 855 66

REGIONAL OFFICES:

Höganäs Borgestad Asia Pacific Group Sdn. Bhd.
A-1-1, Seri Gembira Avenue
6 Jalan Senang Ria
Taman Gembira, 58200
Kuala Lumpur,
Malaysia
Phone: +60 3 7972 3183
Email: asiapacific@hoganasborgestad.com

Höganäs Borgestad Ltd.
24 Stasikratous Str., ELKA bldg.,
Office no. 204, 2nd floor,
CY 1065 Nicosia, Cyprus
Phone: +357 22 662406
Email: middleeast@hoganasborgestad.com

Web: www.hoganasborgestad.com
Mail: cement@hoganasborgestad.com

Höganäs Borgestad