Refractories for
the cement industry

Kiln

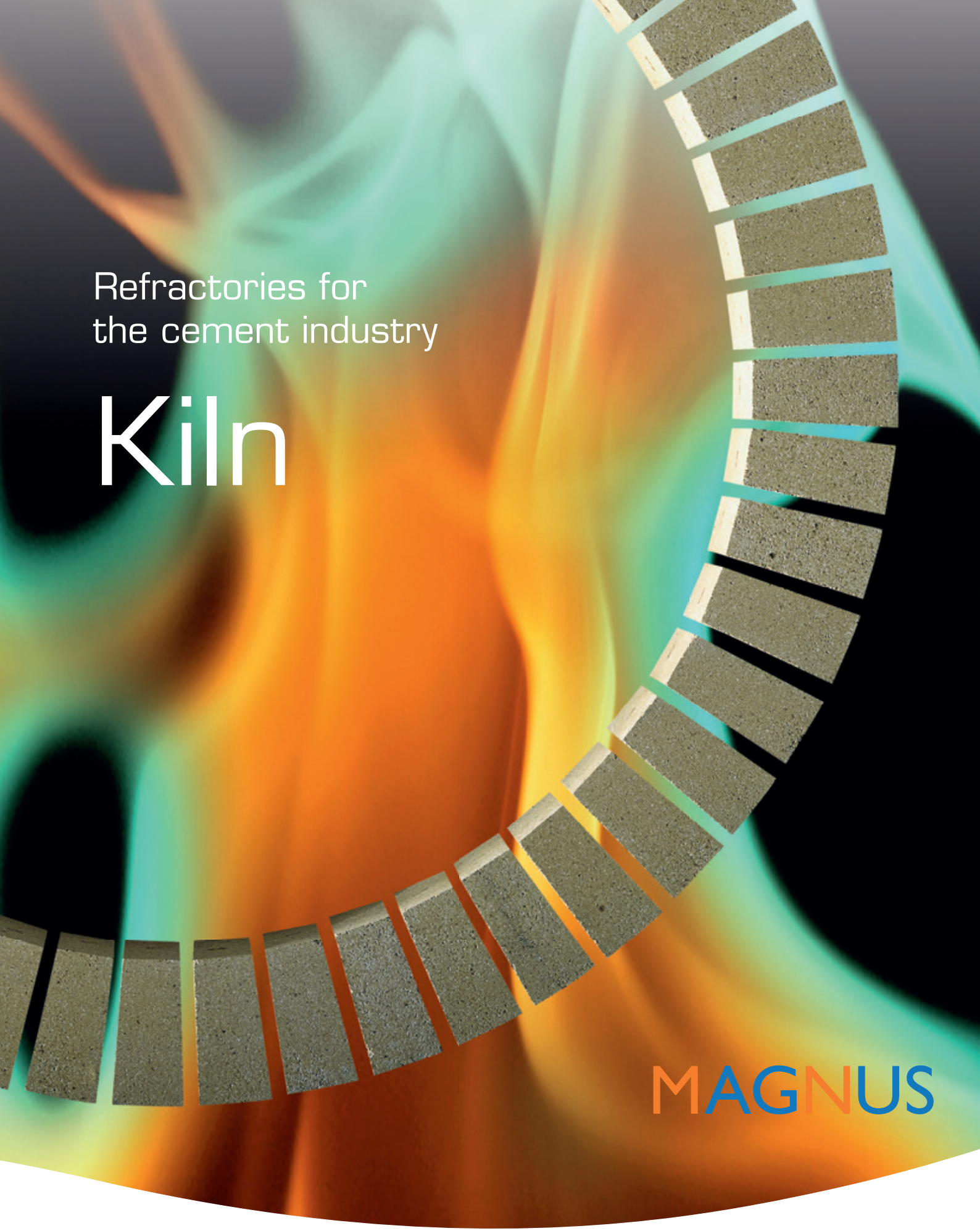

MAGNUS

Höganäs Borgestad

Contents

The Cement Specialists

The special demands of cement manufacturing have always required specialized refractories – especially now, when more and more alternative fuels are used.

That's where we excel. Höganäs Borgestad refractory products improve profitability for cement manufactur-ers in more than 70 countries on six continents. We deliver refractory solutions that perform better, last longer, and give you lower refractory cost per ton of clinker produced – especially if you are burning alternative fuels.

Höganäs Borgestad is a multinational organization, and member of Borgestad ASA. Our activities range from applications-driven R&D, production, distribution, support and service to complete refractory management, including wrecking and installation. R&D, production and corporate headquarters are located in Sweden, with sales and support in more than forty countries around the world.

How to contact us

Höganäs Borgestad is headquartered in Gävle, Sweden, with subsidiaries in Middle East, Malaysia, and agents and representatives around the world.

Höganäs Borgestad Holding AB

Elektrikergatan 1
802 91 Gävle
Sweden

Tel: +46 26 12 01 00

To find your local contact, please call or fax us at the numbers above. Up-to-date contact information can also be found at: www.hoganasborgestad.com

2. Kiln

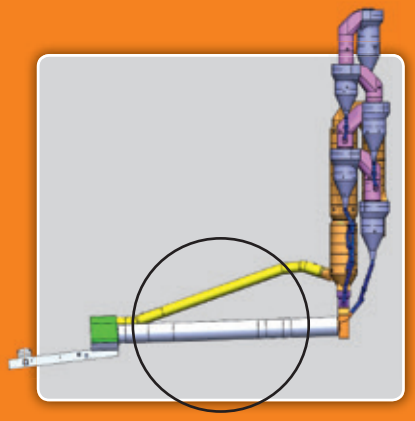

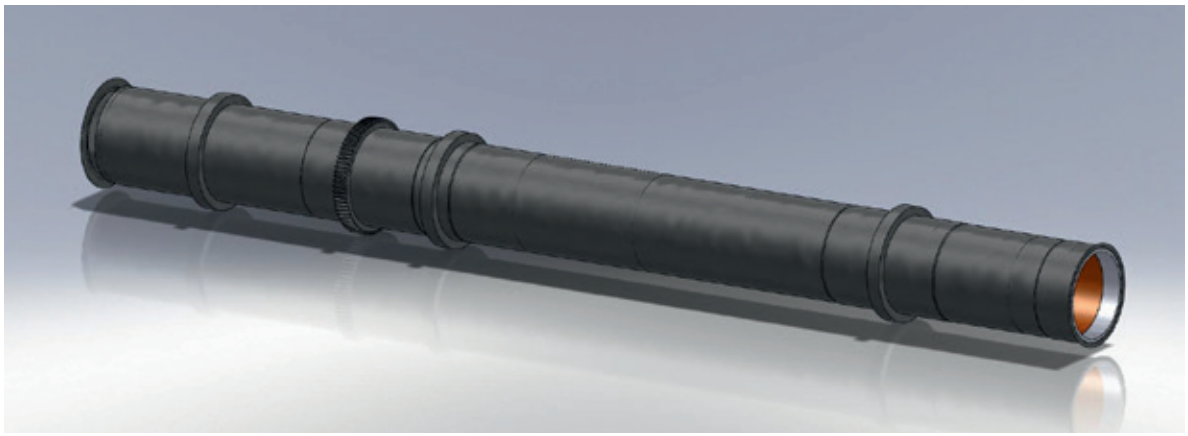

In this section, we focus on dry-process kilns, as they represent the majority of kilns now in use. The refractory requirements of wet- and semi-dry process kilns are essentially similar after the inlet stage.

Fuel efficiency and waste fuels

Today's kilns have shorter lengths without loss of production capacity.

Many producers use the kiln to burn waste materials – a good source of low-cost energy. Widespread use of alternative fuel causes problems for the refractories that are used.

High-temperature areas, usually lined with basic bricks, require higher refractoriness, alkali-and thermal shock resistance, and better resistance to clinker liquid phase corrosion.

Don't ignore the tire rings

When starting up a cold kiln, it is important to allow time for the tire rings to expand in pace with the kiln shell's expansion.

If heat-up is too rapid, the colder tire rings can cause shell deformation, thus crushing refractories. When the tire rings later expand to full operating dimensions, this can cause 'rolling ovality' in the kiln shell. Refractories not already damaged by the earlier deformation will then suffer radial abrasion, with potentially catastrophic lining loss as a result.

Lining your kiln

The following is Höganäs Borgestad's suggestion for lining your kiln, both for standard and alternative fuels. Brick or monolithic?

With the exception of the inlet cone and the nose ring, the kiln should always be lined only with brick. Brick heights, which depend on kiln diameter, range from 200 mm and up.

On the following pages, we deal specifically with the following areas of the kiln:

- Inlet cone (1)
- Inlet zone (2)
- Safety zone (3)
- Upper transition zone (4)
- Burning zone (5)
- Lower transition zone (6)
- Cooling zone (7)
- Nose ring (8)

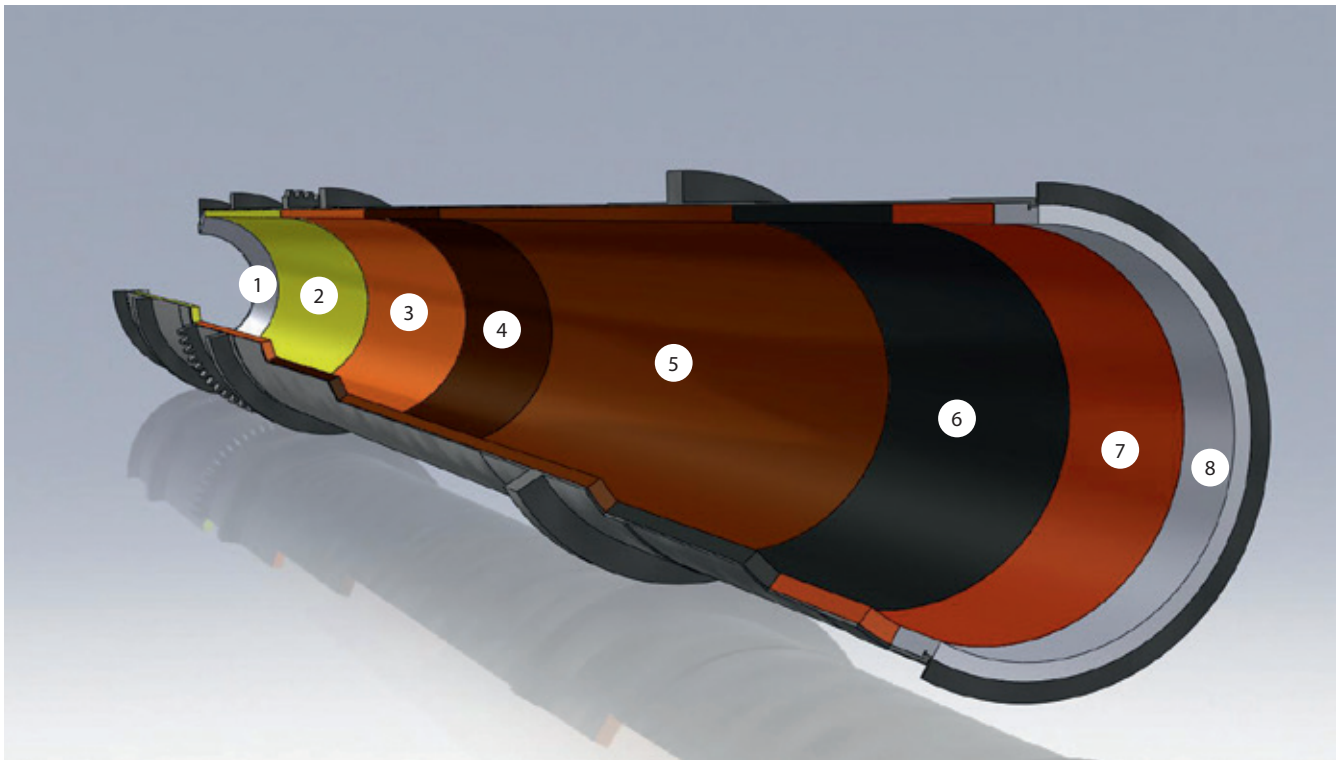

Inlet cone 1

The most important considerations here are alkali- resistance. Raw meal can quickly deteriorate refractories that are not resistant, and temperature fluctuations can cause condensation of alkaline vapors in the refractory lining.

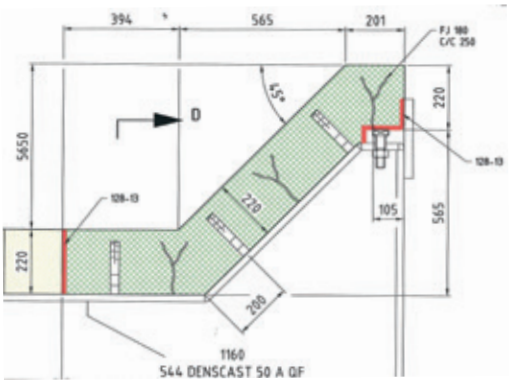

Inlet cone - cast

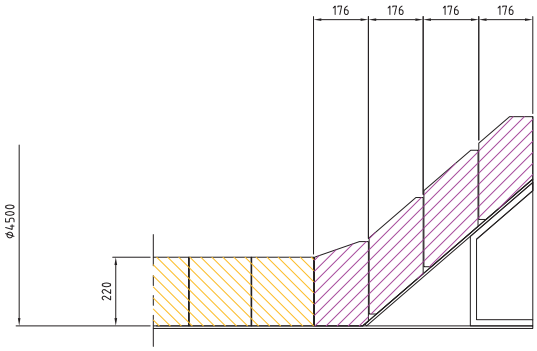

Inlet cone - bricked

INLET CONE

Refractory lining thickness: 200-250 mm, depending on kiln diameter

	BRICK	MORTAR	MONOLITHICS HÖGANÄS	ANCHORS	SHELL PROTECTION
STANDARD	Viking 330	Höganäs H-15	HÖGANÄS CAST LC 50AR	Stainless Steel	
ALTERNATIVE FUELS	Viking 330	Höganäs H-15	HÖGANÄS CAST CC S10	Stainless Steel	CoroTexPro

Above suggestions is guiding principles.
Note that each kiln is individual and for precise recommendation, please contact Höganäs Borgestad.

Inlet zone 2

The primary criteria here are alkali-resistance.

INLET ZONE

Refractory lining thickness: 200-250 mm, depending on kiln diameter

	BRICK	MORTAR	SHELL PROTECTION
STANDARD	Viking 330	Höganäs H-15	
ALTERNATIVE FUELS	Viking 450	Höganäs H-15	CoroTexPro

Above suggestions is guiding principles.
Note that each kiln is individual and for precise recommendation, please contact Höganäs Borgestad.

Safety zone 3

The primary criteria here are alkali- and abrasion-resistance. Brick lining should have a progressively increasing refractoriness and alumina content. Low thermal conductivity is good if the reaction occurring is still endothermic, but insulation benefits should be weighed against the risk of alkaline attack and thermal overload.

SAFETY ZONE

Refractory lining thickness: 200-250 mm, depending on kiln diameter

	BRICK	MORTAR	SHELL PROTECTION
STANDARD	Viking 450/ Alex	Höganäs H-15	
ALTERNATIVE FUELS	Viking 450/ Alsic 500/ Alex	Höganäs H-15	CoroTexPro

Above suggestions is guiding principles.
Note that each kiln is individual and for precise recommendation, please contact Höganäs Borgestad.

Upper transition zone 4

When liquid phase begins to appear in the raw meal, the kiln lining becomes more vulnerable. This occurs in the upper transition zone. The more variables that occur, the greater is the need for the correct magnesia-based refractories. Variables include:

- Variations in oxygen potential, caused by use of multiple fuels. After several redox cycles, some brick qualities may become weak and friable.
- Operation with an unstable coating – caused by a variety of factors. Brick becomes exposed to infiltration by clinker liquid phase.
- Direct action of alkali chlorides and sulfates, a result of using several waste fuels. Brick may subsequently cap.
- Build-up of abnormal rings, resulting from unbalanced sulfate modulus.
- Kiln shell corrosion, caused by sulfate and chloride diffusion through the refractory, can result from the burning of some waste fuels.

UPPER TRANSITION ZONE

Refractory lining thickness: 200-250 mm, depending on kiln diameter

	BRICK	MORTAR	SHELL PROTECTION
STANDARD	Magnus CF 02	Magnus Bond	
ALTERNATIVE FUELS	Magnus 87AF Magnus 90 AF	Magnus Bond	CoroTexPro

Above suggestions is guiding principles.
Note that each kiln is individual and for precise recommendation, please contact Höganäs Borgestad.

Burning zone 5

Two factors are paramount to the optimal functioning of the burning zone. First, and most manageable from the technical viewpoint, is the question of combustion engineering - the achievement of proper flame pattern, heat and combustion.

Succesful combustion engineering supports optimum clinker formation, and minimizes wear and stress on refractories and kiln shell.

Poor combustion engineering leads to thermal overload and rapidly fluctuating redox conditions, which are bad for both refractory lining and clinker. Thermal overload will ultimately cause the refractory to melt. Redox conditions lead to the brick's accelerated friability, or brittleness.

The second factor is equally important: the generation of clinker coating on the refractory brick. This protects the brick and helps the clinkerization reaction throughout the kiln.

Several variables can affect the maintenance of this coating:

- Large fluctuations in raw meal parameters and poorly nodularised clinker can result in liquid phase segregation, which reduces the thickness and stability of the coating.
- The use of high-sulfur fuels, combined with poor combustion engineering, can lead to a higher sulfate compound volatilization and ring formation build-ups.
- A number of factors can cause coating to disappear completely, with a resulting tendency for the brick to become weak and friable due to thermomechanical fatigue.

Among them are:

- Production of high SiO_2 clinker
- Production of sulfate-resistant clinker with C3A (3 % as result of Fe_2O_3 addition).
- Prolonged thermal overload
- Frequent shifting of fuel type
- White cement production

Some of these factors increase the risk of corrosion of the bricks' MgO. Al_2O_3 spinel. This is due to attack by CaO and C_3A which can cause formation of MgO and $C1_2A_7$.

BURNING ZONE

Refractory lining thickness: 200-250 mm, depending on kiln diameter

	BRICK	MORTAR	SHELL PROTECTION
STANDARD	Magnus CF 02	Magnus Bond	
ALTERNATIVE FUELS	Magnus 87 AF Magnus 90 AF	Magnus Bond	CoroTexPro

Above suggestions is guiding principles.
Note that each kiln is individual and for precise recommendation, please contact Höganäs Borgestad.

Lower transition zone 6

Though less complex, the variables that affect this zone are still extensive.

Excessive ovality of, or damage to, the kiln shell causes mechanical stress. This can lead to to crushing and displacement of refractories and, ulitmately, may cause a catastrophic twisting of the brick lining.

Use of alternative fuels with high alkaline and sulfur content may lead to "capping", caused by the infiltration and condensation of alkalis in the brick. This pheonomenon can also occur as a result of thermal overload, or from firing with the burner tip coincident with the nose ring or outlet zone. Thermal overload can also cause spalling, a result of thermal shock.

Very abrasive "dusty" clinkers - high in SiO_2 - can cause high abrasion wear on refractories.

Clinker that has a high liquid phase content with low viscosity may lead to a ring formation build-up, as well as "capping". Ring formation can also result from thermal overload, as well as the use of high-alkali, high-sulfur fuels.

LOWER TRANSITION ZONE

Refractory lining thickness: 200-250 mm, depending on kiln diameter

	BRICK	MORTAR	SHELL PROTECTION
STANDARD	Magnus 87 AF	Magnus Bond	
ALTERNATIVE FUELS	Magnus 87 AF Magnus 90 AF	Magnus Bond	CoroTexPro

Above suggestions is guiding principles.
Note that each kiln is individual and for precise recommendation, please contact Höganäs Borgestad.

Cooling zone / Nose ring 7 8

The discharge zone is often severely stressed. Abrasive clinker outfall can cause wear on both refractory linings and steel segments, and thermal shock and axial expansion often accelerate refractory wear.

Original brick linings should be of flexible, highly abrasion-resistant brick.

When steel nose ring segments become worn out, producers have two alternatives: to replace them and reline with brick, or keep them and switch to a castable lining. Höganäs Borgestad can supply cost-eff ective refractory solutions for both alternatives.

COOLING ZONE / NOSE RING

Refractory lining thickness: 200-250 mm, depending on kiln diameter

	BRICK	MORTAR	MONOLITHICS	ANCHORS	SHELL PROTECTION
STANDARD	Victor 60/70/80 RK	Höganäs T Cement	HÖGANÄS CAST LC 801	Stainless Steel	
ALTERNATIVE FUELS	Alsic 500/ Alsic 4000	Höganäs T Cement	HÖGANÄS CAST CC S10	Stainless Steel	CoroTexPro

Above suggestions is guiding principles.
Note that each kiln is individual and for precise recommendation, please contact Höganäs Borgestad.

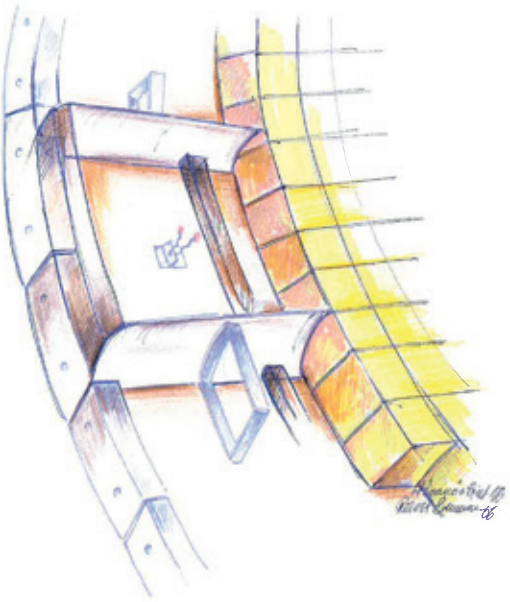

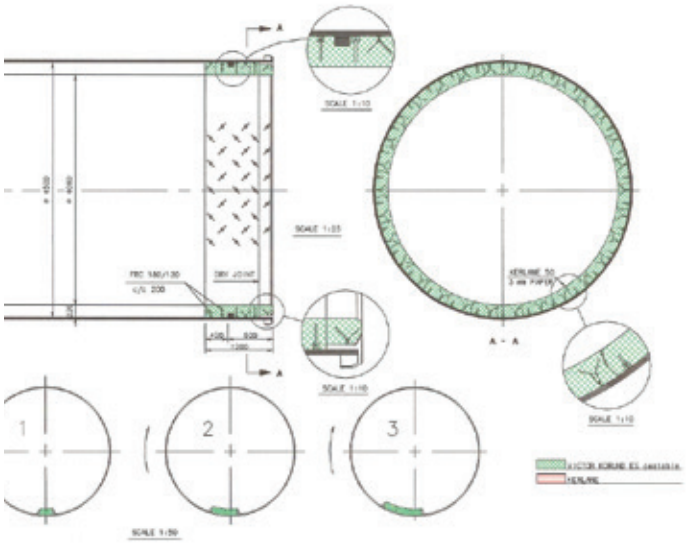

Heating-up curves for basic bricks

1. After shutdowns during which the burning zone does not cool below 300 0C
2. After repairs comprising up to 30 lin m of kiln lining.
3. For new plants with an average capacity of 2000 t/day. In the case of larger plants the heating-up time should be increased by 10 to 20 percent

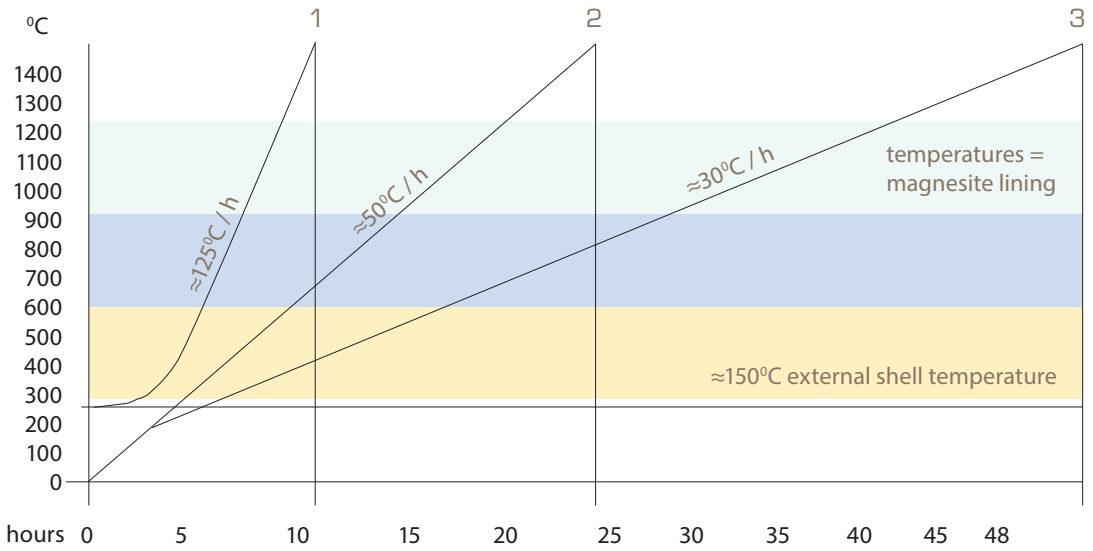

Kiln rotation:

1) In the temperature range of 3000-5000C: ½ revolution every 30 minutes
2) In the temperature range of 6000-8000C: ¾ revolution every 15 minutes
3) In the temperature range of 9000-11000C: continuos rotation at lowest speed
4) In the temperature range from 12000C to working temperature: bring the kiln up to normal operation

Non-destructive lining measurement in seconds

Linometer™ XLNT

Unlike traditional lining measurement, which requires you to drill holes in your lining, the Linometer™ XLNT only needs a small patch of coating to be scraped from the brick surface for you to measure lining thickness with up to 99% accuracy.

It takes just seconds to get a correct reading. You can measure a whole section of your kiln in less than 30 minutes.

Because it is quick and completely non-destructive, you can also make more measurements, more often. This gives you a truly accurate picture of your lining's condition, and lets you plan and rationalize your lining replacement.

The Linometer™ XLNT is packed with features that improve your measurement accuracy while giving you instant feedback on changes in your lining:

- Up to twelve unique measurements can be made at each measuring point, for a detailed picture of the lining's condition.
- Up to 72,000 unique measurements can be made and stored in the Linometer itself. You don't need to make notes, and you get on-the-spot comparisons for previously stored measurements at the same point.
- Data can be downloaded directly to computer, and imported into an Excel spreadsheet.

But the bottom line is your profit. Spend more time making cement, and less in kiln maintenance. That is the goal the Höganäs Linometer helps you to achieve!

The laser guide gives you precise measuring points on the length of the kiln.

PVC probe with 110 x 120 mm face. The probe's small 'footprint' requires minimal coating removal.

Linometer™ XLNT, probe and extension rod together weigh less than 1.7 kg (3.8 lbs).

Easy user navigation via the keypad.

LCD digital display in millimeters or inches. Low battery indicator.

Telescoping aluminum extension arm, extendable up to 1.5 m (5').

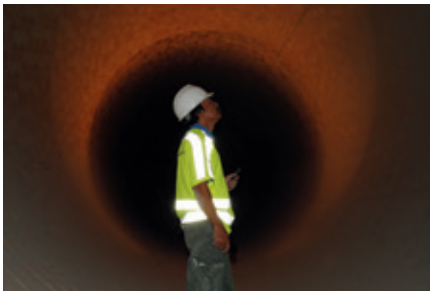




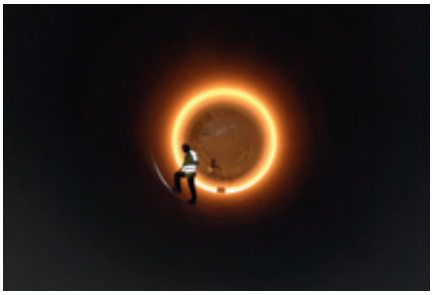

Our offices

HEAD OFFICE:

Höganäs Borgestad AB
Box 502
SE-267 25 BJUV, Sweden
Phone: +46 42 855 00
Fax: +46 42 855 66

REGIONAL OFFICES:

Höganäs Borgestad Asia Pacific Group Sdn. Bhd.
A-1-1, Seri Gembira Avenue
6 Jalan Senang Ria
Taman Gembira, 58200
Kuala Lumpur,
Malaysia
Phone: +60 3 7972 3183
Email: asiapacific@hoganasborgestad.com

Höganäs Borgestad Ltd.
24 Stasikratous Str., ELKA bldg.,
Office no. 204, 2nd floor,
CY 1065 Nicosia, Cyprus
Phone: +357 22 662406
Email: middleeast@hoganasborgestad.com

Web: www.hoganasborgestad.com
Mail: cement@hoganasborgestad.com

Höganäs Borgestad